みんぱくリポジトリ
国立民族学博物館学術情報リポジトリ National Museum of Ethnolo

Rainbow-Like Hierarchy : Dizi Social Organization

メタデータ	言語: English 出版者: 公開日: 2009-04-28 キーワード (Ja): キーワード (En): 作成者: 出口, 顯 メールアドレス: 所属:
URL	https://doi.org/10.15021/00002964

Essays in Northeast African Studies
Senri Ethnological Studies 43, 1996, pp. 121–143.

5 Rainbow-Like Hierarchy: Dizi Social Organization

Akira Deguchi
Shimane University

INTRODUCTION

The purpose of this paper is to depict the social organization of the Dizi, an agricultural people who live in the southwestern part of Ethiopia. I have conducted research among them, focusing particularly on their chieftainship and their social hierarchy. Before taking up the main subject, I shall outline the background in which my study has been conducted, and the presentation method of interpreting data for this paper.

I stayed in Ethiopia from August 1989 to February 1990. I was able to proceed with my fieldwork among the Dizi for approximately three months. The research was conducted in the mountainous district of Sai, located ten hours away on foot from the town of Maji in the Kaffa region, southwestern Ethiopia[1]. As will be mentioned below, Sai is a chiefdom ruled by a traditional chief called the *Saikiyasu*.

During my stay in Sai, I constantly referred to an essay written by the German ethnologist, Haberland (1984). This essay is less than four pages, but it concisely summarized the social structure, especially the hierarchy of the Dizi in the Adikas chiefdom, and served as a staring point to study the social relationships and kinship of the Sai people. While the Japanese version of this paper (Deguchi 1992b) was in press, I came across a book by Haberland, *Die Dizi in Sud-Athiopien: Studien zur Kulturkunde und Geschichte* (Haberland 1993). Based on the same research as the 1984 paper (Haberland undertook his research in May 1970 and in March and September 1974), this book contains many more details on the Dizi social hierarchy and history. However, having reviewed this book, I found that there was no necessity to alter my criticism of Haberland.

Arens (1983: 2) pointed out that the anthropologists who have conducted studies among the same ethnic peoples tend to have different viewpoints of their own and are antagonistic to each other, which was applicable to my case as well[2]. This is because the data I collected proved to be quite divergent from those of Haberland. Haberland was trying to reconstruct the social structure of Adikas during the 1890s, based on the oral traditions of those people. The social structure he analyzed is not the same as that of current Sai society. However, it appears to me that this difference should never be ignored.

For this reason, in discussing the social structure of Dizi in the Sai chiefdom, I

shall first quote Haberland's description regarding each theme, followed by my comments and evaluations, and then, in the end, discuss what issue this divergence raises.

GENERAL SURVEY

"Linguistically the Dizi, together with the related Shako in the north and the Na'o in the northeast, form a branch of the West Cushitic or Omotic language group." (All statements in quotation marks are from Haberland (1984). Due to the brevity of Haberland's essay, I will omit the page numbers.)

K. Fukui, who stayed in Sai for two weeks, and I have discovered, based on the oral tradition, that the ancestor of Chief Saikiyasu was originally a Shako. However, people of Sai nowadays do not understand the Shako language at all. Rather, what they understand now is the language of the Tishana of the Surma group, due to a close relationship through intermarriage, or the language of the Bodi, whose first chief was identified as the descendant of Saikiyasu.

Historically, the most significant event was the conquest by the Ethiopian Empire during the 1890s, equated by the Dizi to the Amhara. The result of invasion and conquest was:

> subjection to the *gabbar* system……and linked with this……economic exploitation and oppression; the abduction (e.g. when new Amharic governors were appointed) of innumerable people as slaves, servants or carriers, only a few of whom were able to return; famine, disease and a growing sense of hopelessness and resignation, engendered by a total absence of justice. These things not only caused the number of the Dizi to shrink (in 1974 there were probably scarcely more than 20,000) but shook their whole culture to its roots.

In the Dizi myths of the separation of heaven and earth which are, at the same time, myths on the origin of death, the Amhara are described as the root of all evil. The following is such a myth told us by Zalaka, an old Dizi. "Once upon a time, heaven (= God, both described as *saagu*) and earth were closer to each other than now. People were living happily together, and there was no death on earth. However, when the Amhara came, people started to deceive, steal, and hurt each other even within the same community. Heaven and earth became separated far apart, and from then, people started to die." Zalaka had a son inducted into the army by the Amhara at that time, and seemed to have a strong anti-Amhara sentiment. This myth was not known by all, and did not necessarily describe the Amhara as the cause of the separation of heaven and earth or the origin of death.

The subsistence of the Dizi is based on the cultivation of sorghum, ensete, tef, barley, and maize. Haberland wrote that "cattle must have been of some importance before the coming of the Amhara although today their role is virtually insignificant." In Sai even now cattle play an important role as sacrificial beasts and

as means of bridewealth. The bridewealth consists of some heads of cattle and there must be one bull included. It is slanghtered and its skin is placed on the bed of the father of the bride (see Note 3). Cattle are killed for every ritual of purification, divination (using intestines), or rain control.

Haberland wrote about the chiefdom: "Until they lost their independence, the Dizi were divided into over twenty chiefdoms, with shifting boundaries and allegiances." The chiefdoms were distributed from southeast to northwest as follows: "Kolu, Adi, Muy, Tsiski, Maji (Kyerts, Gelkamo, Kuri), Wor, Say, Mash, Gobi, Aro, Duku, Dami, Kanta, Ezkolu, Kasi, Beru, Gay, Garo, Jabba, Bay." These chiefdoms, which Haberland has outlined, have somewhat changed. My informants said that Duku is included in Dami, and Kasi in Jabba. Also, the power of each chief is considered rather ceremonial than political, but not all the chiefs possessed the ritual power of rain control (see Appendix 1).

HIERARCHICAL SOCIAL ORGANIZATION OR CASTE?

"Hierarchy" in Sai society

On the "caste system" of the Dizi, Haberland states:

> Their social structure was characterized by a caste system which, even by Ethiopian standards, could be termed hypertrophic, and by a strong emphasis on the principle of primogeniture. Society was organized hierarchically into five castes: nobles (*karyab*), freemen (*nyank*), bondsmen (*zaku*), *geymi* and hunters (*kwoygi*). *Geymi* is a special caste, closely associated with the nobility, with manifold functions as craftsmen and in the sacral sphere. Each caste was distinguished by a large number of prerogatives, obligations, taboos and special 'languages.' The nobility was in turn divided into seven hereditary ranks, although these did not form a hierarchy in the political sense: they had more to do with the ritual status of the holder than with his political power.

These seven hereditary ranks were as follows: "*Kyaz, Burji, Tso'ani, Koyz, Bar,* and *Keysi.*"

The point where my view differs with that of Haberland concerns the hierarchy and castes. If all the social classifications of people are to be regarded as a "hierarchy," then the "hierarchy" seen in Sai society today, is organized as follows:

a. Chief (*Saikiyasu*), *koichiezi* (a village headman, or the head of an area) and their relatives (*kaariyab*), *baabaishi* (a ritual expert, both Sai and *uruki* [see immediately below])[3] and his relatives;

b. *uruki* (a man not originally Sai, and his patrilineal descendants);

c. *geima* (the retainer) which corresponds to *geimi* of Haberland.

The caste that Haberland called the *kwogyi* class does not exist in Sai today. The word *nyank* is occasionally used as a name of a person, or the rank of a village headman, but I could not get any information from Sai people that this word is

currently used to indicate the freemen.

According to the informants, everybody is allowed to possess his own land as he wishes, instead of having to borrow somebody else's property for cultivation. When newly reclaimed land is cultivated, a *koichiezi* may occasionally perform a ritual (the detail is unknown). However, this does not mean that the *koichiezi* possesses the ownership of that land. The land of Sai is ultimately in the possession of *Saikiyasu*, but people are not required to ask *Saikiyasu* for permission when they wish to reclaim land for their own use, nor are they considered tenant farmers. This point was confirmed also by the headmaster of Sai Elementary School whose father is an Amhara and his mother Dizi, and by the vice administrative officer of Tum. Therefore, it seemed that the notion of distinguishing freemen and bondsmen was unheard of for these informants. The term *zaku* still exists in Sai, but does not mean a serf, or a bondsman. *Zaku* in Sai is a synonym for *koichiezi*, and therefore, the following statement of Haberland has lost its validity.

> The bondsmen, for example, even though they constituted the majority, could not own the land which was distributed to them by the local petty chiefs, nor did they have any political organization, nor could they express their opinions openly. They were subjected to a very strict tribute-system and had to deliver a major part of their grain (mostly sorghum) to their superiors after each harvest. They could not even slaughter their cattle without the consent of their chiefs. And even worse: if they did not fulfill these obligations, they lost their status of bondsmen and temporarily or permanently became slaves.

As for the *kwoygi* whom Haberland describes as the "hunters' caste," I was told that there are no hunters in Sai, but there are *kwoygi* engaged in fishing or hunting on the Omo River. In short, *kwoygi* is not one of the caste ranks in Dizi but rather corresponds to the Koegu (Kwegu), among whom Hiroshi Matsuda and Osamu Hieda have carried out research (see their papers in this volume). When I returned to Tum, the nearest town to the airport, after finishing my research at Sai, I happened to meet the linguist Dr. Harold Fleming. His assistant for collecting Dizi words at that time was "S," a Dizi high school student, who used to live in Adikas, the land where Haberland conducted his research. His cousin, "A," who lived in Tum, was there too, so I asked them some questions about *kwoygi*.

According to A, *kwoygi* are hunters and from Dizi. *Kwoygi* lived in Adikas, Maji, Jabba, and Gobi. There are some among the Surma (Tishana) called *nyara*. *Kwoygi* and *nyara* mean the same. When *geima* of the *adikiyasu* were not present, *kwoygi* conducted rituals on their behalf. *Geima* and *kwoygi* are of different peoples. For most of the people, eating meat of cattle which have died from an illness is considered a taboo, but *kwoygi* would eat it.

However, S explained that there are no *kwoygi* in the land of Dizi. Instead they only exist in the surroundings of the Omo River. From the story he heard from his grandfather, when the elders of the village and the *adikiyasu* gathered to

drink coffee, it was a taboo to call somebody a *kwoygi*, for this word conveyed some contempt. The two young men had completely different opinions. Furthermore, when I asked a middle-aged man from Java about this matter, he told me there were no *kwoygi* in Jabba, but there are some in Grafalda. However, he did not clarify whether the *kwoygi* are Dizi. In any respect, the identity of the *kwoygi* was not clarified, and I hesitate to classify *kwoygi* as the lowest rank in the caste system. The oral tradition on the history regarding Sai and *kwoygi*-Koegu (Kwegu) will be discussed later.

Uruki

The Dizi language term *zuru* corresponds to "blood relationship" or "blood relatives." It refers to the cognatic kin as opposed to the affines, who are *toozu*. There is no folk term meaning the agnatic kin or a patrilineal descent group. However, if one continues to live in the land where he was born, in general, the actual form of inheritance would be patrilineal. Marriage tends to be virilocal, and the couple reside on land near the groom's father. But occasionally, people leave the chiefdom where they were born and move into the chiefdom where the mother's relatives (especially the mother's brothers) live. In this case, as Haberland pointed out, they are free to migrate to different lands and it is quite easy for them to obtain their own land in the new chiefdom where they have immigrated. But even if one was a *kaariyab* in the original land, he changes to *uruki* in his new land, is not recognized as *kaariyab* any more, and his patrilineal descendants remain *uruki* regardless of how many generations pass. In a broad sense, a marriage between two *kaariyabs* of the same chiefdom is avoided, unless it is clear that both the bride and the groom are not of the same *zuru*. However, in contrast, marriage between a *kaariyab* and an *uruki* within the same chiefdom is allowed. That is to say, marriage between two different "classes" is possible[4].

Geima

A *geima* has to marry a *geima* and remains *geima* even if they move into a different land. However, I happened to run into a *geima* woman getting married to a *kaariyab* man. The daughter of Zalaka Zer, who was *geima*, married Keishi Komtu, a relative of the *Saikiyasu*, to be his third wife. She had no child yet. The elders made some comments that such a marriage had been impossible in the old days and that things are changing abruptly, but in fact, it may be open to further discussion whether this is a recent trend or not. It is not certain whether the *geima* marriage rule had been strictly observed or not, and secondly, this particular marriage was not spoken of as horrifying or scandalous.

The roles played by the *geima* are mainly to assist a chief, to help a *koichiezi* conduct rituals, and to transport or bury their bodies in funerals. It is predetermined which chief or *koichiezi* a *geima* would serve. Unlike the Hindu castes, there is no conflict between the upper class groups of the caste over the service of the lower class. The *geima* elders are so well informed about events in the

past or the precise genealogy of the people who live in the area, and the names of the successive *Saikiyasu*, that they could be called knowledgeable seniors.

The *geima* are not allowed to use the same containers, when they drink local alcoholic beverages, as those from the other classes. The chief and the *koichiezi* must also use different containers. The gourd container, used by the chiefs and the *koichiezi*, which has three or four engravings on the grip, is called *geini*. The one without such engravings is called *kofu*. *Baabaishi* never drink alcohol from *geini*. Those who hold the chieftainship or headmanship can only use *geini*, but their relatives (*kaariyab*) cannot. The *Kaariyab* are not necessarily distinguished from other classes in regards to *geini* usage. The *geima* are obliged to use *kofu*, however, and are not allowed to use the same *kofu* as other people from different classes. They cannot drink from *geini*. Thus, with regards to tableware and marriage, the *geima* are largely distinguished from other people, but their freedom to choose a place to live or to possess farmland is ensured.

Chief, *koichiezi*, and *kaariyab*

The seven hereditary ranks which Haberland outlined are not the sort of ranks in which all the *kaariyab* are divided and classified into seven groups, but are rather the ranks of occupations as chief or *koichiezi* (or a classification by type). According to Fukui, who conducted research in the same place as Haberland had done, the hierarchy of ranks is as follows:

kiyazu > *kiyam* > *burzi* > *koizi* ≒ *nyangu* > *ts'ooni* > *zaaku* > *baabu*

kiyazu is the highest rank. The people who belong to this rank eat and drink together, and never dine with people from other ranks. However, the people who are of a higher status within *burzi* and *kiyam* are allowed to dine together with *kiyazu*. *Koizi* and those who are ranked lower, regardless of how high their rankings are within the group, never dine with those who belong to *burzi* or higher ranks. *Ts'ooni* and *zaaku* are allowed to eat and drink together. (Fukui, personal communication.)

The Sai informants told me that they did not know anything about *baabu*. In addition, they said that *zaku* (*zaaku*) means the same as *koichiezi*. I obtained the information concerning the rank orders by asking the informants which was the "bigger" or "smaller" of the two ranks. Considering their answers as to which is "bigger" or "smaller," the criterion the informants used is whether that group is allowed to drink from the same *geini* as the other group. The following are the results:

1) *kiyaza* > *burzya* > *kyama* > *tso'ina*, *burzya* ≧ *chiezya* > *koiza*
2) *kiyaza* > *nyanga* = *koiza* = *chiezya* = *burzya* (inside Sai)
3) *kiyasu* > *burzi* > *kyam* = *nyang* = *tswoni* > *chiezi* > *koiza*
4) *kiyaza* > *burzya* > *kyam* = *tswoni* = *koiza* > *keishi*
5) *kiyaza* > *kyam* > *burzya* > tswoni > *koiza* > *nyang* = *chieza* = *zaku* > *keishi*
6) *kiyaza* > *kyam* > *burzya* > *koiza* = *chiezya* > *tswoni* > *nyang* = *keishi*
7) *burzya* > *kyam* (from the same informant 2).

The words in the lists are rank names. So, for example, the Maiburzi is the *koichiezi* whose rank is *burzya* and who lives in Mait (see Appendix 1 and 2).

As can be seen from rankings 1 to 6 listed above, all the informants selected *kiyaza* (the rank name of *Saikiyasu* and *Adikyasu*) for the highest rank, but apart from this, their opinions greatly differ. No. 1 clarified the ranking between *chiezya* and *kyama*, whereas for No. 2, within Sai, all the *koichiezi* other than *Saikiyasu* were in the same ranking. No. 5 was obtained from two *geimas* and probably provides the most reliable information among these seven rankings. However, one of these two informants came to me on another day with another informant, and did not particularly express any objection while No. 6 was being recorded, as above. No. 6 was obtained from a *koichizi* called the *Baasu*, from an area of Gelt. The *Baasu* belonged to the rank of *kyam*. He is regarded as very ambitious and I presume that he gave me information in such a way as to uphold his position as predominant over others. The aforementioned *geima* asked Baasu if his opinion was true, and when Baasu nodded with full confidence, he did not seem to insist on his own viewpoint. *Zaku* appeared in ranking No. 5, but this was to say that *zaku* signified the same as (*koi*) *chiezi*.

It is obvious from the various opinions listed above, in Sai the ranks are not always strictly distinguished or fixed. Or as can be seen from No. 2, the ranks, apart from the specially treated Saikiyasu, do not seem to have much significance within Sai society. Many of the informants stated that all the *koichizi* were allowed to drink the local alcoholic beverage from the same container, or dine together, and they all emphasized that there were no ideological differences in the ranks. Apart from *kiyaza*, the informants did not seem to put much significance on rank and were normally not aware of it. The reason for the diversity of the opinions as seen above could be because of their embarrassment at an unexpected question from an anthropologist.

We should, perhaps, consider the ranks not as a matter within one chiefdom, but rather as differences in the authority of the chiefs of different chiefdoms. When, for example, one chief visits another chief, ranking occasionally comes into question for deciding the seating order for dining. Since there is no king or paramount chief who dominates the Dizi as a whole, within each chiefdom, the chief is superior in any case, and the informants do not seem to take much heed of other ranks.

The tasks of the chiefs, *koichiezi* and *baabaishi*, as Haberland also stated, are very ceremonial. The chief conducts the ritual to control rainfall by offering sacrifice, and "ceremonially supervises" the abundance of the harvest and the health of the people in his entire domain. During the ritual to eliminate contagious disease, for instance, where only goats are sacrificed, I was told that the *Saikiyasu*, as a priest, smeared himself with the blood of the victims (I did not have any chance to witness this). The *koichiezi* prayed for the health and prosperity of the area he dominated. For example, Baasu, as a *koichiezi* of Gelt, invited his relatives and neighbors to his house, and conducted a ritual plastering of gray-green colored soil

on their foreheads and right elbows (not to let disease get into their body), so that people would not suffer from illness, and that the Tama, Surmic pastoralists, would not invade their territory. The soil he used is called *chiizi*, and the ceremony of plastering it is described as *chiizi sieeri*. However, since Baasu is also renowned as a diviner, it is difficult to judge whether he conducted this ceremony as a *koichiezi* or as a diviner. On the other hand, *baabaishi* are not allowed to conduct these rituals as the chief does. What is often witnessed during these ceremonies of praying for good harvest and prosperity is that the people who normally drink the local alcoholic beverage during a break in farmwork pour the remaining liquor in the bottom of the gourd onto the ground, while *koichiezi* and *baabaishi* utter prayers to God (*saagu*). If a *geima* is present, it is his role to pour the liquor onto the ground. This ceremony of pouring liquor onto the ground is called *choi choin*.

Haberland stated that the five castes "were distinguished by a large number of prerogatives, obligations, taboos, and special 'languages'." However, from my research, I discovered that the various obligations and taboos are specific to the office of chief and *koichiezi,* not to a whole class or a whole rank. For instance, there are containers for their exclusive use, such as *geini*, and the chief and *koichiezi* do not dine using the same container as *kaariyab* and *geima*. *Uruki* are not allowed to cough while eating with them. There are two types of food made from ensete: *udu* and *imbu*. The chief and *koichiezi* can eat *udu* made with ensete, but are prohibited to eat *imbu*. Besides beef, they do not eat any meat of other animals. Barley and tef are not to be touched by them, unless they are cooked. The *Saikiyasu* do not drink any liquid, including the local alcohol, in the town of Maji. This taboo is only for the *Saikiyasu*. Cultivating yam in the compound of *Saikiyasu* in the central area of Sai is not allowed.

However, the above restrictions apply to the office, not the caste. Therefore, I doubt the validity of the following statement of Haberland:

> All five castes were separated by an extremely large number of regulations and prescriptions. This was true, in a rather hypertrophic manner, especially for the nobility: who was addressing whom with which expressions; who could sit together with whom, eat with whom and drink with whom; even who could see whom. The same referred to the taboos on food, and the different kinds of meat which one could eat. The castes were also separated by different methods of slaughtering animals. There were even regulations as to which plants one could eat or touch: thus the nobility could not even see raw cereals except sorghum. Members of the nobility had a 'language' of their own, i.e. they used more than one hundred different words for the house or the ceremonial staff, etc. of a noble.

As for the special linguistic expressions, unfortunately, I was not able to confirm them during my research.

THE CUSTOMS AND TRADITIONS THAT ERODE THE CASTES

Haberland considered the Dizi society to be a caste society. However, what is a caste in the first place? According to the definition of Hatton, quoted by Leach, its features are as follows: Endogamy; Restrictions on dining together with members of different castes; Hierarchical classification of the caste. Brãhmans are positioned on the top; When the upper caste come into contact with a member of the lower caste, especially with regard to food and sex, either directly or indirectly, the upper caste is considered to be "polluted"; It is related to the traditional occupations; The position of a person in the caste is determined upon birth; The overall system is focused on the prerogatives of Brãhmans (quated in Leach 1960: 2-3).

Concerning the usage of the word caste, Leach gave us a warning: "Caste, in my view, denotes a particular species of the structural organization indissolubly linked with a Pan-Indian civilization.... Consequently I believe that those who apply the term to contexts wholly remote from the Indian world invariably go astray" (Leach 1960: 5). Also, there are some scholars on India today who argue that caste itself is not specific and indigenous to India, but was actually invented by Europeans during the course of colonization (cf. Fuller 1976). Therefore, it is all the more necessary to be careful in applying this term to other societies.

Haberland seems to have taken into consideration the aforementioned warning by Leach, as he wrote, "one cannot speak of a real 'caste system.'... Whereas in Ethiopia one could speak of the special castes in the sense of 'occupational' castes, this could not be applied to the Dizi."

Nonetheless, Haberland used the word "caste" frequently. This was because he presumed that the Dizi society was remarkably hierarchical and that there were various taboos and obligations for each rank, and also because he assumed that the history of the invasion of a foreign culture into the original native culture was the cause of such a hierarchy (Haberland 1993).

However, from my own field data, it is highly doubtful to use the term "caste" for describing Dizi society. It is evidently endogamous by the fact that the child of the chief marries the child of another chief, and that a *geima* is obliged to marry a *geima* partner. But there is no problem with marriage between *kaariyab* and *uruki*, and as I have mentioned before, there is an example of a marriage between *kaariyab* and *geima*. Also, if an old *koichiezi* meets a young *kaariyab* of *Saikiyasu,* the *kaariyab* has to bow to the older man. The ranks do not seem to be related to occupation, nor is the perception of being polluted too strong. Not only this, but there are other customs and traditions in Dizi which are difficult to understand if we insist on relating them to the caste model.

Ritual of *Naali* (friendship)

Naali is the ritual, regardless of the hierarchy or the category, to affirm friendship between people of the same sex, and to become close friends. When two people

start to like each other and decide to become *naali*, the ritual is conducted in the house of one of them. During this ritual they tap each other's shoulders (*diyeem*) with goat hide four times; first right, then left (repeated twice). First the person of the house starts tapping the other's shoulder, then vice versa. They must call each other's name when tapping the shoulders. When this is finished, the persons concerned are not allowed to speak to each other until a second ritual in the other person's house is completed. They communicate with each other through a third person. After three months to one year, the second ritual will be conducted in the other person's house. At this time, many local people gather around with some local liquor in their hands. New *kofu* are prepared. There are broken into two and the two persons who are becoming *naali* separately drink liquor with the fragments. The fragments of the broken *kofu* would then belong to each of them. Then, as was done before, they tap each other's shoulders several times with the goat hide. The one who conducted the first ritual presents the other with a cow. The one who is given the cow has to raise it for about three years and breed at least one calf. This will be given to his partner. Such is the outline of the ceremony. I did not have an opportunity to witness this *naali* ceremony and these descriptions were given by several informants.

After the *naali* courtesy is completed, the two people concerned become quasi-relatives. Therefore, the descendants of *naali* are not allowed to marry each other. This is because they are recognized as *naali* as well. This ritual is possible even between persons of different ranks. Therefore, a *kaaliyab* man and a *geima* man can become as close as relatives as a result. This sort of relationship must be something that contravenes the "caste" system. This ritual is completely approved in Sai, although in fact, it does not take place too often.

It may be objected that this ritual represents a kind of so called "communitus" and therefore does not contravene the caste structure. Nonetheless, it should be recognized that Dizi society is not composed of a monolithic rank system.

The legend of the *Shanguu*, the founder of *geima*

The founder of the *geima* in Sai is a man called Shanguu. There are various legends with regards to the first *Shanguu*, some of which are summarized below. They are also closely related to the origin of the *Saikiyasu*.

A. When the first *Saikiyasu* came from the direction of the Shako, the first *Shanguu* came from Omo. They met with each other in Sai. Before then, *kwoygi* did not live in this land. This was the land of the first *Urumburzi* and the first *Bookuchiezi*. (After the conquering of Sai by the *Saikiyasu*, they became *koichiezi*.) The first *Shanguu* was a *kwoygi*. After he arrived from Omo, he lived in Gaazunbaal, near Muit. The first *Saikiyasu*, too, when he arrived in Sai, after he plundered the land by fighting with *Urumburzi*, *Bookuchiezi*, and *Orukugaju*, lived in Gaazunbaal. *The Shanguu* and *the Saikiyasu* met then, and since *Saikiyasu* was higher in rank, *the Shanguu* decided to serve *the Saikiyasu*.

B1. The first *Shanguu* was in Sai from the beginning and he was the *kwoygi-*

burzi, the chief of the *kwoygi*. At that time, he was living in the area where *Aaluburzi* (one of the *koichiezi*) is now living. When the first *Saikiyasu* came and conquered Sai, both *Shanguu* and *Urumburzi* became his followers. Later, *Merukiyasu*, the son of *Saikiyasu* moved into the land of Bodi. At that time, half of the *kwoygi* escaped to the land of the Bodi, accompanying the *Merukiyasu*.

B2. When the ancestor of *Saikiyasu* came from the land of the Shako, the child of *Saikiyasu* who came with him was only the first *Demtkoishi*. The other children were born after he arrived in Sai. The *geima* who accompanied him to this land then were *Gaazun* and *Diizu*. They became the ancestors of *geima*. *Shanguu* was in this land and was the chief of *kwoygi*. When the *Saikiyasu* arrived, some *kwoygi* escaped to the Omo River and became the Kwegu of today. Other *kwoygi* moved out together with the son of the *Saikiyasu* when he escaped to the land of Bodi. The *Shanguu* remained and became the *geima* of the *Saikiyasu*.

C. The first *Shanguu* came from the land of the Shako with *Chubiyab* and *Goru*, as the *geima* of the *Saikiyasu*.

As can be seen from legends B1 and B2, the *Shanguu*, originally the native *burzi* or *koichiezi*, was in the same position as *Urumburzi* in legend A (present *tsuwooni*), *Bookuchiezi, Orukugaju* (before the *Saikiyasu*'s arrival, the highest ranking, but now a *baabaishi*), and *Dechiburzi* (present *baabaishi*)[5].

On the other hand, legends A and C tell us of the foreign origin of *Shanguu*. It is also interesting that legend A resembles the following legend about *Yiemburzi*.

D. At the time when the first *Saikiyasu* came to this land, the first *Yiemburzi* also arrived at this land from the southeast direction of the Omo River. They met in Sai. The *Saikiyasu* and *Yiemburzi* became *nairibab* (for this word, see below). Since they became *nairibab*, the relatives of *Saikiyasu* and the relatives of *yiemburzi* were not allowed to marry each other.

According to these legends, both *Shanguu*, who is the *geima* of *Saikiyasu*, and *Yiemburzi*, came from the southeast and met *Saikiyasu* in the land of Sai. Because of these identical circumstances and direction of the origin, it is likely that both *Shanguu* and the *Yiemburzi* play a similar role within the relationship with *Saikiyasu*. The similarity of the ritual roles of *nairibab* in legend D and *geima* could be significant.

The *nairibab* is important, because it is the key to understanding that *geima* is not only equivalent to *koichiezi* in the legend (particularly in D), but equivalent and interchangeable even today. A *nairibab* is a person indispensable to conduct rituals such as divination, using the intestines of animals. Only when a *nairibab* is present the ritual is started by killing a cattle or goat and smearing its blood on the *nairibab's* body, after which people drink the local liquor. For example, the *Saikiyasu* does not start the ritual until the *Yiemburzi* arrives. There is a stone in the courtyard of the chief, *koichiezi* or *baabaishi* on which they pour liquor. This stone is called *miili*. When the ritual is conducted at *Saikiyasu*'s place, the only person who is allowed to pour liquor on *miili* is the *Yiemburzi*. When it is conducted at the *Yiemburzi*'s house, only the *Saikiyasu* is given the privilege to

pour liquor on *miili*. The *Yiemburzi* is the *nairibab* of not only the *Saikiyasu* but also of his relatives.

The ritual role of *nairibab* is quite similar to that of *geima*. The major task of *geima*, especially the *Shanguu*, is to prepare for the ritual which is to take place at the *Saikiyasu*'s home, kill the cattle, and smear its blood onto the body of the *Saikiyasu* and himself. It is also said that no ritual may be started without the *Shanguu*. With regard to the ritual role, there seems to be no particular difference between a *nairibab* and a *geima*. Also for the installation ceremony of the *Saikiyasu*, the *Yiemburzi* and *Shanguu* are indispensable.

Actually, we had an opportunity to witness a ritual in which a *nairibab* of the *Saikiyasu* acted on behalf of the *Shanguu*. It was when Fukui and I requested the *Saikiyasu* to perform the ritual of praying for the prosperity of the Dizi and Bodi (whose chief is said to have come from Sai and among whom Fukui has conducted his research). A cow was killed, but the persons who were smeared with blood were the *Saikiyasu* and the *Orususu*, a *baabaishi*. This was because the *Shanguu* had passed away and there was nobody who would inherit his position at that moment, so the *Orususu* substituted for the *Shanguu*. The *Orususu* is one of the *nairibab* of *Saikiyasu*, and he is an *uruki* as well as a *baabaishi*[7].

From the above legends and rituals, we may assume that the *koichiezi* and *baabaishi* are structurally equivalent to the *geima*, especially the *Shanguu*, at the bottom rank of the hierarchical society of Dizi, within legend and ritual. Also, a *geima* told me that the *Saikiyasu* and the *Shanguu* were the same. It is possible, of course, to consider this opinion as an overstatement of his actual role, that the *geima*, the lowest ranking caste, was in fact indispensable to the chief. However, even so, the identical nature of the ceremonial activity of the chief at the top of the society and that of *geima* at the bottom, should not be ignored. Moreover, legend C. narrates that the *Shanguu* and the *Saikiyasu* have always been together from the beginning. That is to say the *geima* could be considered structurally identical to the *Saikiyasu*. I would like to advance my interpretation at least to encourage reconsideration of the previous view that Dizi society is a strict caste society. The social structure of Dizi seems far more flexible than that of a caste system. The point that it cannot be understood in reference to a simple caste model is also true for the *Kumu*, who is described below.

The *Kumu*

The *Kumu* is said to be "the mother of the people (*yabkoi*)": he was the first human being to obtain fire. Holding the fire in his hand, which he started by rubbing pieces of wood together, he moved from Gemo-Gofa near the Omo River to a land called Kwomo in Mui. The *Kumu*'s descendants now live in Mui. The person who takes up the title of the *Kumu* is a male. However, the *Kumu* is not the chief of Mui. The chief of Mui is the *Muikyam*, while *kumu* remains in the rank of *burzya*.

As for the *Kumu*, I was able to collect an oral tradition as follows: When *Saikiyasu* came from the land of the Shako to Sai, Sai was already the territory of

the *Kumu*. After the *Saikiyasu* conquered this land, the *Saikiyasu* became the follower of the *Kumu*. The chiefs other than the *Saikiyasu*, under the *Kumu*, were the *Daagburzi*, the *Woruburzi*, the *Muikyam* (*Muigaju*), the *Gobitiyaar*, and the *Majikurit* (Adikas, Kworu, and Chiski are not the ceremonial territory of the *Kumu*). The ranking of the *Kumu* is *burzya*, but is higher in rank than the *Saikiyasu*, and there is nobody else who is higher. The founders of some *baabaishi* in Sai are said to be the children of the *Kumu*. When a *baabaishi* or *koichiezi* dies, the *Kumu* comes to Sai and conducts the ritual. A cow is killed then, and given to the *Kumu*.

In 1988 (?), a ritual was conducted in Sai to pray for recovery from illness, prosperity, and abundance. That was the year when dysentery was prevalent all over the land. The *Kumu* came then from Mui and attended the ritual. The ceremony took place in the *Saikiyasu*'s home. One cow was sacrificed and the *Kumu* smeared the body of the *Saikiyasu* with the blood. The right legs (the best part) were given to the *Kumu*. While the *Kumu* was in Sai, he did not stay at the *Saikiyasu*'s house but stayed at the house of a *geima* (who was the candidate to succeed the *Shanguu*). When the *Kumu* came to Sai, the *Saikiyasu* pleaded to him that there were no women, children, grain, or cows in this land, but only a few elders. The *Saikiyasu* implored him to provide some cows, grain, women and children. The *Saikiyasu* ordered the people to prepare food and local beer to entertain the *Kumu*. When the *Kumu* arrived at Sai, instead of immediately visiting the *Saikiyasu*, he bided his time on the way. When the feast was prepared, the *Saikiyasu* called the *Kumu* and chanted the implorations above. In response, the *Kumu* said that he would give him food, and they all ate beef and then smeared the blood of the killed cow onto the body of the *Saikiyasu*. While the *Kumu* took the right legs, the *Saikiyasu* ate the left legs. The *Kumu* took the meat back to the place where he stayed and ate it alone. When the *Saikiyasu* and the *Kumu* were together in the same room, the *Kumu* sat on a platform higher than the *Saikiyasu*. They drank beer from different *geini*.

The relationship between the *Kumu* and the *Saikiyasu* is not a so-called double sovereignty system, where one represents the mundane political power, while the other is the religious authority, but rather both represent only the ritual authority. It should be noted here that the *Kumu* of *burzya* is higher in rank and possesses dominant power over the *Saikiyasu* of *kiyaza*. If we are to recognize Dizi as a caste society, as Haberland did, it is impossible for somebody from *burzya* to be superior to someone from *kiyaza*. In fact, those who bear the titles of *kyam* and *burzi* exist even among the chiefs as well as the koichiezis, and those titled as *nyang* among the baabaishis.

I propose a Dizi social model in which, although the people are classified by their categories or their offices, they share something in common in the cosmological dimension represented by ritual and myth–one may imagine the Kline bottle as this model, in which the top is at the same time the bottom–rather than a model where each category is strict and hierarchically systematized.

DISCUSSION

So far I have presented an account regarding the social organization of Sai, relying on a critical review of Haberland's study. However, I have no intention to insist that my data or interpretation is solely legitimate. My research also, after all, was conducted only in a short period of time, and I did not master the language. What I have written shoud be deliberated by others in the same critical way as I have done to Haberland. Haberland and I, after all, should be a starting point.

In this last section I would like to discuss the regional diversity that may have led to the disparity between my observations and Haberland's. I carried out my research in Sai, whereas Haberland chose Adikas (Adi). The difference in social organization and customs may have been a reflection of this regional diversity. This point should not be ignored when studying the "ethno-system" of northeast Africa. Introducing this new concept, Fukui insists on recognizing the mutual relationships among various ethnic groups as one single system (quoted in Kurimoto 1994: 64). However, there is a concern whether we should consider those peoples as a single unit, within which mutual relationships take place. We may not ignore the variations within a people, as well as among the peoples. Rather, it seems that internal variation is an element in any ethno-system. For example, the Dizi and Kwegu are related by the oral tradition of *kwoygi* (hunters). However, Sai and Adikas may disagree on whether to recognize the *kwoygi* as the independent ethnic group of Kwegu. Moreover, even given the myth of Sai that indicates *kwoygi* as Kwegu, the relationship between Dizi and *kwoygi* is still dynamic[8]. Also, there may be a full spectrum of interethnic relations between confrontation and peaceful coexistence, although the possibility of this spectrum is not taken into consideration in Fukui's analysis (Fukui 1994: 36). It may be safe to say that not all Dizi are in a hostile relationship with the T'ama, Surmic pastoralists, just as not all the Nuer are hostile to all the Dinka, everytime, everywhere (Johnson 1994). Moreover, historical transformations must be taken into consideration.

The next point is the issue of informants. Haberland collected his information mainly from the *Adikiyasu*. According to Fukui, who interviewed the same person, when the *Adikiyasu* mentioned the rank of the chief, *koichiezi*, he referred to "ranking in the army" as a metaphor: The person on top, i.e. the general, was the *Adikiyasu*. My informants, although most were *geima*, included some *koichiezi* and *uruki*. I did not have a chance to ask the *Saikiyasu* himself about rank, and this may be one of the reasons for the disparity with Haberland.

In studying the social orderings, offices and categories of people, if one informant's perception of social orderings or classification may differ from that of another, it is impossible to define such social systems as "caste." If the social organization of Sai and that of Adikas resemble each other, the mutual relationship between the social categories of Dizi people, I believe, is similar to the relationship among the colors of a rainbow. That is, around the top of the arch, the color red is above all layers, yet, towards the root of the arch, all the colors are at the same

level. I liken the social "hierarchy" of Dizi to this rainbow, whose superior/inferior relationships differ subtly depending on the point from which one views it. However, just as the outermost and the innermost colors of the rainbow are fixed (red and violet), the social positions of the chief and *geima* seem to be nearly fixed.

The ranking order of chief>*koichiezi*>*baabaishi* is, like the color arrangement of the rainbow, fixed. A *baabaishi* relative is not *kaariyab*, yet, there are almost no taboos or rankings between them. Nor is the *kaariyab* of the chief "in a higher position" than the *kaariyab* of *koichiezi*. The *kaariyab* does not have any prerogatives or special taboo until he becomes the chief or the *koichiezi*. A young man said that in Dizi, there are only *kaariyab* and *geima*. There seems to be not much difference between the relatives of *baabaishi* and *kaariyab*. *Uruki* could have possibly been *kaariyab* in the chiefdom where they or their ancestors originated. In any case, the "caste" society of Haberland is no more than merely a very "fictive, abstract and general" "illusion," that is very remote from, and does not account for, any individual or specific "events" of Dizi social reality.

ACKNOWLEDGMENTS

My research in Ethiopia was funded by a Grant-in-Aid for Scientific Research of the Japanese Ministry of Education, Science, Sports and Culture. It was part of the research project "Comparative Studies on the Systems of Subsistence Economy in North-East Africa: Folk Models and Their Applicability." I am grateful to Professor Katsuyoshi Fukui, the project head, and other members of the project. The research in Ethiopia was made possible through the affiliation to the Institute of Ethiopian Studies, Addis Ababa University. My gratitude goes to Dr Taddase Beyene and other staff of the IES. Also in Ethiopia, I owe a great deal to the staff of the Japanese Embassy, including the then Ambassador Tadaichi Ito. Finally, I would like to convey my deep appreciation to all of them. I do not know how to express my appreciation to Professor Yoichi Tsuge of Kanazawa University who personally translated most parts of the Haberland's book (1993) for me.

NOTES

1) I obtained some of my data in Amharic, the official language of Ethiopia. Most of the people of Dizi who lived in the chiefdom of Sai spoke Amharic. However, my Amharic speaking ability was not such as to comprehend complex issues, so that I had to rely on elementary school teachers who could speak English as interpreters. I made little progress to communicate in the Dizian language, apart from some daily salutations, due to my short stay.
2) For example, Nagashima, who studied the Teso of Kenya, said of Ivan Karp, who also conducted research among the same people: "I realized that there is a huge difference between the Teso society which he described and the actual state of Teso society which I observed with my own eyes, and in fact his research has taught me the contrary, rather than become the basis of my study (my translation)" (Nagashima 1987: 10).
3) As for the lists of *koichiezi* and *baabaishi*, see Appendix 2. Including that of the chief, all the names are hereditary. Therefore, for example, when the eldest son takes up the office

of *koichizi* which is called *the baasu*, after succeeding his father, he also inherits the name Baasu as his personal name. From then onwards, it is discourteous to call him with his name before the inauguration.

4) With regards to kinship in Dizi, it is not possible to track the genealogy for more than three generations. Although the *Saikiyasu* and the *koichiezi* of the villages are exceptions, even for them, only the names of the chiefs and *koichiezi* (before the inauguration) of the preceeding generations are remembered and not the entire relationships of their children and grandchildren. Moreover, those who remember all the names of the chiefs and the *koichiezi* are only a part of the people called *Geima*, explained later on, who are categorized as the followers of the chiefs and the *koichiezi*. It is not true that the descendants of the chiefs remember the genealogy of their own family. As for the general survey of Dizi kinship, see Appendix 3.
5) According to the old *geima*, Zalaka Zer, who was one of my main informants, *Dechiburzi* was in Sai before the first *Saikiyasu*, and at the beginning he was *koichiezi* and drank from *geini*, but after he lost the battle against *Saikiyasu*, he was "demoted" to *baabaishi*. Since then, all *Dechiburzi* could not drink from anything else but *kofu*.
6) The way *Yiemburzi* conduct their funeral is different from the rest of Sai people. They bury the body under a pile of rocks. They say this custom is similar to the peoples along the Omo river. The reason why they do not bury the body under the soil is that it would be eaten by hyenas. Yet only the males, the brothers or sons of *Yiemburzi*, are buried under rock and the females, the daughters and sisters, are buried under the soil.
7) Not only *koichiezi* and *baabaishi*, but also *geima* sometimes perform as *nairibab* to the chief and *koichiezi*. Tuubu Gelgitch and the *Nuibab*, who are *geima*, are *nairibab* of the *Baasu*, and their role is to transport the body to the graveyard when the *Baasu* dies. They are the only ones who are allowed to enter the graveyard of the *Baasu*. The *Nuibab* is also the *nairibab* of *the Saikiyasu*, and will transport the body of the *Saikiyasu* to the graveyard. (The relationship is one-sided and when the *Nuibab* dies, neither the *Saikiyasu* nor the *Baasu* transport his body to the graveyard). The *Shanguu* does not play this role. Perhaps because of all these complications, there were times that the *Orususu*, the *baabaishi*, performed on behalf of the *Shanguu* of *geima*, and some informants were not able to clearly distinguish *nairibab* from *geima*.

   The *nairibab* relationship is observed not only between the chief and *geima*, or between the chief and *koichiezi*. For example, Zalaka Zer who is *geima* and Tuutn who is *baabaishi* are both *nairibab* for generations and both are involved in the funerals of each other's families. After a funeral is over, they throw a white cloth, which they wear, over the threshold of the house of the dead. The *nairibab* plays the very important ceremonial role of sprinkling water on that cloth. It is also often seen that one person becomes *nairibab* of several others.
8) James (1988) inferred, on the basis of the history of the Uduk people, who live on the boundary of Sudan and Ethiopia, that they may have a hunting culture as an "archive." The same presumption may also be applied to the Dizi, if we further pursue the tradition of *kwoygi*.

REFERENCES

Arens, W.
1983 Evans-Pritchard and the Prophets: Comments on an Ethnographic Enigma. *Anthropos* 78: 1–16.

Deguchi, Akira

1992a Yasei no kojin mei (Rethinking the Properness of Personal Names). *Shisō* 813: 111–141. (in Japanese)

1992b Echiopia seinanbu Dizi no shyakaikōsei (Is the Dizi a Hierarchical Society?). *Swahili & African Studies* 3: 79–102, Osaka University of Foreign Studies. (in Japanese)

Fukui, Katsuyoshi

1994 Conflict and Ethnic Interaction: The Mela and Their Neighbours. In K. Fukui, and J. Markakis (eds), *Ethnicity and Conflict in the Horn of Africa*, pp. 33–47, London: James Curry.

Fuller, C.

1976 British India or Traditional India?: An Anthropological Problem. *Ethos* 41: 95–121.

Haberland, E.

1984 Caste and Hierarchy among the Dizi (Southwest Ethiopia). In S. Rubensons (ed.), *Proceedings of the Seventh International Conference of Ethiopian Studies*, pp. 447–450, Addis Ababa: Institute of Ethiopian Studies, Uppsala: Scandinavian Institute of African Studies, East Lansing: African Studies Center, Michigan State University.

1993 *Die Dizi in Sud-Athiopien: Studien zur Kulturkunde und Geschichte*. Stuttgart: Franz Steiner Verlag.

James, W.

1988 *The Listening Ebony: Moral Knowledte, Religion, and Power among the Uduk of Sudan*. Oxford: Clarendon Press.

Johnson, D. H.

1994 *Nuer Prophets: A History of Prophecy from the Upper Nile in the Nineteenth and Twentieth Centuries*. Oxford: Clarendon Press.

Kurimoto, Eisei

1994 Kyōdō kenkyū memo—hokutō-afurika ni okeru esuno-sisutemu no jisshōteki-kenkyu (A Note on the Joint Study Program: The Empirical Study of Ethno-System in Northeast Africa). *Minpaku-Tsūshin* 65: 64–71. (in Japanese)

Leach, E. R.

1960 Introduction: What Should We Mean by Caste? In E. R. Leach (ed.), *Aspects of Caste in South India, Ceylon, and North-West Pakistan*, pp. 1–10, Cambridge: Cambridge University Press.

Nagashima, Nobuhiro

1987 *Shi to yamai no minzokushi—kenia-teso-zoku no saiinron* (Ethnography of the Death and Sickness among the Kenyan Teso). Tokyo: Iwanami Shoten. (in Japanese)

Appendix 1: Dizi chiefdoms and chiefs

Chiefdom		Chief	Chief's power over rainfall	Executor of Chief's rainfall ritual #
Kolu	(Kolu)*	*Koluburzi*	+	
Adikas	(Adi)	*Adikiyasu*	−	*Chiskiyasu*
Chiski	(Tsiski)	*Chiskiyasu*	+	
Gaaru (Keltskumbit)	(Garo)	*Gaaruburzi*	−	*Chisukiyasu*
Meshi	(Mash)	*Meshikiyasu*	+	
		Zenkiyasu	−	*Meshikiyasu*
Sai	(Say)	*Saikiyasu*	+	
Dui		*Duikiyasu*	−	*Saikiyasu*
Gelkamo	(Galkam)	*Duuruna***	−	*Woruburzi*
		Dagburzi	−	〃
		Chobikiyasu	−	〃
Woru	(Wor)	*Woruburzi*	+	
Kelt	(Kyalt)	*Keltkyam*	−	*Woruburzi*
Gobi	(Gobi)	*Gobitiyaar*	+	
Meru (of Gobi)		*Merutiyaar*	−	*Gobitiyaar*
Maji		*Majigaju*	−	*Woruburzi*
(kurit)		*Majikuri*	−	〃
Kaaltsu	(Karts)	*Kaaltsukyam*	−	*Woruburzi, Gobitiyaar*
Aaro	(Aro)	*Aaroburzi*	+	
Dami	(Dami)	*Damiburzi* (*Daamikaar*)	+	
Duku (of Dami)	(Duku)	*Dukuburzi*	−	*Damiburzi*
Kanta	(Kanta)	*Kantaburzi*	−	〃
Osklu	(Ezkolu)	*Oskluburzi*	−	*Damiburzi*
Jaba	(Jabba)	*Jababurzi*	+	
Kaishi (of Jaba)	(Kasi)	*Kaishiburzi*	−	*Jababurzi*
Bay	(Bay)	*Bayburzi*	+	
Byero	(Beru)	*Byeroburzi*	+	
Mui	(Muy)	*Muikyam* (*Muigajyu*)	+	

* Words in parentheses indicate the expression by Haberland.

** *Duuruna* is not a traditional chief, but dominated the land with armed force.

The chief who conducts the rainfall ritual for another chiefdom in the case that its chief does not possess ritual power over rainfall.

Appendix 2: *Koichiezi* and *baabaishi* within Sai

Koichiezi	Residential area

1. The children of successive *Saikiyasu* who became *koichiezi*

Demtkoishi	Diimt of Orukut*
Ilichikoishi	Mait
Tarumkoishi	Tarum
Udumkoishi	Udumt
Danchiezi	Danga (Dyanga)
Yizukoishi	Yiista
Kamchiezi	Kammo
Baasu (koishi)	Gert
Diizikichiezi	Dyamt
Tookinyang	Toogu
Bworuchiezi	Bworu
Tuulutkoishi	Tuulutu

2. *Koichiezi* whose ancestors came from other lands

Yiemburzi	Yiemt

3. *Koichiezi* whose ancestors were the natives of the lands

Maiburzi	Mait	
Aaluburzi	Ayilut	
Bookuchiezi	Booku	
Urumtsweni	Tuufu	
Birikoishi (?)	Yiemt	
Gudiburzi	Gert	(No successor or relatives)

Baabaishi	Residential area

1. Natives who had already been in Sai before the first *Saikiyasu* came

Dechiburzi	Yiemt
Iibu	Zagunt, Saing
Orukugaju	Nenkiga
Tuutn	Jyaatu of Orukut,
Ibutibaasu	Zagunt, Saing
Kaarubab (Baini Donkale)	Ilutut
Airibab**	Ilutut
Baishibab**	Ilutut
Gotuburzi	Zagunt

2. The people who are related to *koichiezi*

Suurukinyang	Delgit
Motbab	Gert

Chiebui	Tuufu

3. The people who are *uruki*

Baakeishi	Muit of Orukut
Orususu	Tarum
Fyeete	Tuufu
Kworuku	Chuudarkut of Orukut
Kooruna	Delgit
Kelshi	Zagunt
Nebushi	Zagunt

* Orukut indicates a wider area in which the residence of Saikiyasu is constructed.
** Dead, no successors
The classification indicated as 1, 2, and 3 in this list is based on the opinion of Zalaka Zer

Appendix 3: Notes on descent, kinship and marriage

The Dizi vocabulary has the word *zuru*, which indicates kindred, but there are no lineages or clans, with proper names. There is even no word that corresponds to "family," and there are no surnames. Even so, in daily life, emphasis is emotionally put on paternal relationships. As seen in the genealogy of *the Saikiyasu* in Figure 1, upon the death of a *Saikiyasu*, his son or younger brother succeeds him. Of course, there are exceptions. As seen in Figure 2, the reason the present *Demtkoishi*, one of the *koichiezi*, managed to obtain the current position, was not by the patrilineal principle in a strict sense. Also, when a younger brother dies, it is taboo for an elder brother to inherit the property and the family of the deceased. When a son marries, in general, he keeps his residence near his father or in the same village, and marriage is virilocal, that is, the wife moves into the residence of the husband. Therefore, under such patrilineal tradition, even when a person is born and raised in the land of Sai, if his/ her father or patrilineal ancestors have been an *uruki*, he/ she is also *uruki*. In contrast, even if matrilineal ancestors were *uruki*, if the father was not, then the descendant is not considered *uruki*. As such, the *uruki* descent plays an important role in the social structure. It assures the possibility of intermarriage within the village. The "son" and "daughter" of the chief often marry the relatives of other chiefs in different areas. It is not so unusual that the *koichiezi* of the village, *baabaishi*, and their relatives arrange a spouse from another area. Even so, some prefer to find a spouse from the same area, whom they are familiar with, instead of taking the trouble to have a stranger as a spouse. In such cases, it is very convenient to have *uruki* within the village.

As I have mentioned already, marriage between kin is not allowed. The kin are called *zuru* in the Dizi language. When you ask somebody from Sai what *zuru* means, the response you will get is, "flesh is one, blood is one." Marriage with *zuru* is *alkuz* (taboo), and therefore, the cross-cousin marriage, which is well-known

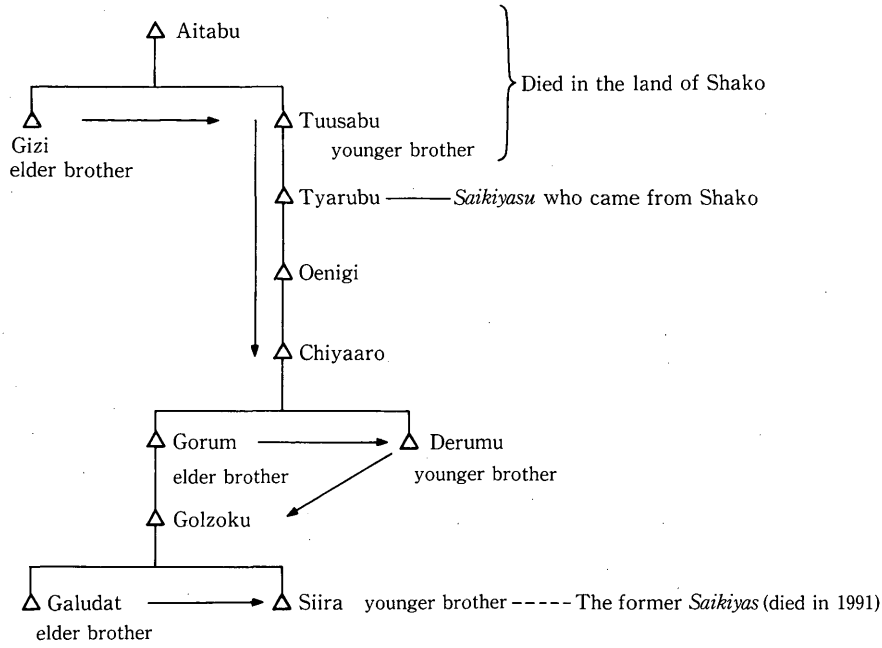

Figure 1. Successive *Saikiyasu*

This genealogy differs from that of *Saikiyasu* by Fukui (1994: 41), even though the information was obtained from the same informant.

among anthropologists, is not approved in Dizi society. Other than this taboo, there are some other *alkuz,* especially among close relatives. For example, there is an expression called "oh *swidee*" which is quite often used to express amazement. *Swidee* means "the private part of a woman" and it is taboo to use this expression in front of a married sister. It is also taboo to sleep in the same house as the married sibling. This relationship is called *kob*. However, a man and his *yaami* (FZ) is not *kob*, but his *yaami* can sleep in the man's goat skin for a bed. This is not considered *alkus*. The relationship between a woman and her *aku* (MB) is also not considered *kob*.

There are some taboos among affines. For instance, a man must not use the expression "oh *swidee*" in front of the "mother" of his wife (including the classificatory mother), nor is he allowed to be seen naked. When these taboos are violated, he has to repay his mother-in-law and the aforementioned married sisters with cattle. These cattle will be ritually killed for sacrifice, and the mother-in-law and the sisters smear its blood onto their bodies to purify themselves.

The cattle paid as bridewealth is called *ashum*. The most common custom is to pay three in total, one bull and two cows. However, it is expected for persons in a higher social rank, such as the close relatives of the chief, to pay more cattle. The cattle as bridewealth does not have to be paid at once before marriage, but may be

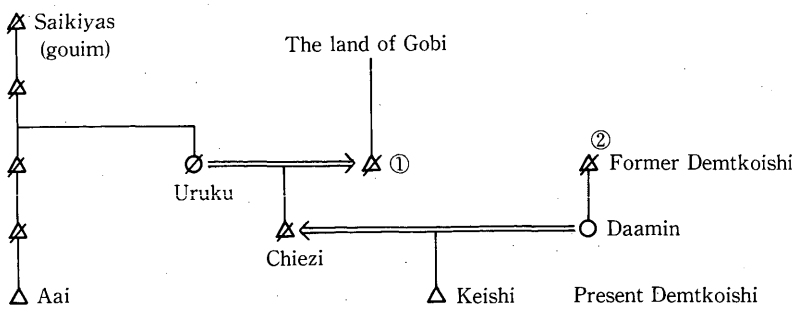

Figure 2. Genealogy of *koichiezi* Demtkoishi

Uruku married a man of Gobi (①) but her husband (①) died while she was pregnant. Uruku returned to Sai and Chiezi was born.
Chiezi married Daamin, the daughter of a former Demtkoishi (②). However, Chiezi and Uruku were killed by Tama of Surmic patoralists. Daamin was pregnant at that time.
The former Demtkoishi had no other children than Daamin (some say that other children all died without leaving any descendants). Thus the child of Daamin, Keishi, succeeded to the position of Demtkoishi.

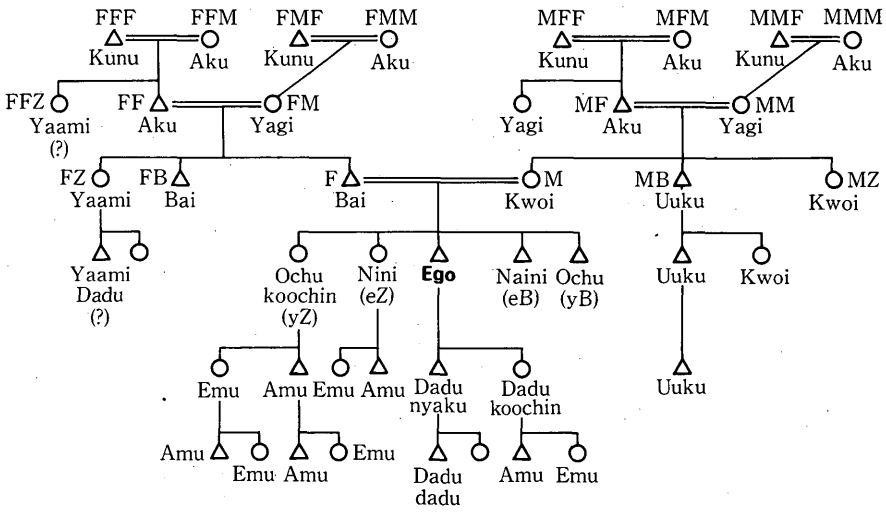

Figure 3. Kinship terminology

paid even after the bride and the groom start their new life or even after a child is born. However, one bull must be paid to the "father" of the bride first. This bull belongs to the "father" and he is free to do whatever he wants with it. The hide of this bull is used as the bed of the "father" and nobody is allowed to infringe on the right of the father. In case the wife runs away from her husband with her child, the relatives of the wife must pay back the cattle they have been paid by the relatives of

the husband. But the bull paid to the "father" of the wife is an exception, and does not have to be paid back. When the wife runs away leaving her child behind, the cattle do not have to be paid back.

For the kinship terminology, refer to Figure 3. Note that the terminology for the male descendants of the brothers resembles the Omaha type, and that the grandfather (MF, FF) and the great grandmother (FFM, FFM, MFM, MMM) are indicated with the same term, *aku*.