みんぱくリポジトリ
国立民族学博物館学術情報リポジトリ National Museum of Ethnolo

# 7. Koryak Society and Marriage



| メタデータ | 言語: English<br>出版者:<br>公開日: 2009-04-28<br>キーワード (Ja):<br>キーワード (En):<br>作成者: 煎本, 孝<br>メールアドレス:<br>所属: |
| --- | --- |
| URL | https://doi.org/10.15021/00001765 |

# 7. Koryak Society and Marriage

## 7.1 Reindeer Herding and Nimiyolgan

That autumn, at the end of September, it snowed for the first time at the top of Shaman Hill, which lies behind the tundra. The Russian researchers, Mikhail and Vasha didn't get up till ten o'clock that morning, because they had visited some villagers the night before and had returned at one o'clock. When we contacted Alekseev's father, Vakhtangov, he had been watching the Mexican soap opera "Maria," but said he would come over to Alekseev's place when it had finished. I was going to ask him about their social system, with reference to what he had told me about the "olden days" and the present. I wanted to know which relatives had lived together inside the *yanana*, and how they had been involved with reindeer herding; what they had called each other; how they had married one another; how the reindeer had been inherited.

Vakhtangov came to visit us saying "*Amtoh* (hello)" wearing his smile as usual. He started to talk about what the community had been like around 1931 when the *kolkhoz* was organized – i.e. from 1922, the year he was born, to 1940, before World War 2. In other words, about his life until he was about 18. He had lived together in a single *yanana* together with his parents, two brothers, his sister, his father's parents and their children, his cousin (the son of his mother's brother) and the cousin's wife and children. In 1935, one of his brothers died and in 1937 his sister also died. They made three bedrooms within one *yanana* and lived there. One was at the rear end facing the entrance; another was at the right rear corner and another at the left rear corner. One was for Vakhtangov's parents and the children, the second one was for his father's parents and their children, and the last one was for his cousin and his wife and their children. Collectivization had already started at that time, and governmental officers had explained to them that they had to work for the nation. Consequently, people had been worried that in the future families might be separated and wouldn't be able to see each other anymore: that was why they had lived together in one *yanana*. Vakhtangov said that they certainly used to live in separate *yananas* before.

Vakhtangov's grandfather (his father's father) had had brothers, and his father had had brothers too. They lived in another *yanana*, and he said that those who had been living together with him had been only come to be together by coincidence. Subsequently, in 1936-37, Vakhtangov moved to another *yanana* with his parents and his younger brother. His father's parents and their two unmarried sons (younger brothers of Vakhtangov's father) had also moved out to live in another *yanana*. These two younger brothers never got married. He said that one of them seemed to have had a kind of disease. But the other one was outstandingly healthy. In fact, he was a very quiet person and was never interested in anything. Vakhtangov said that

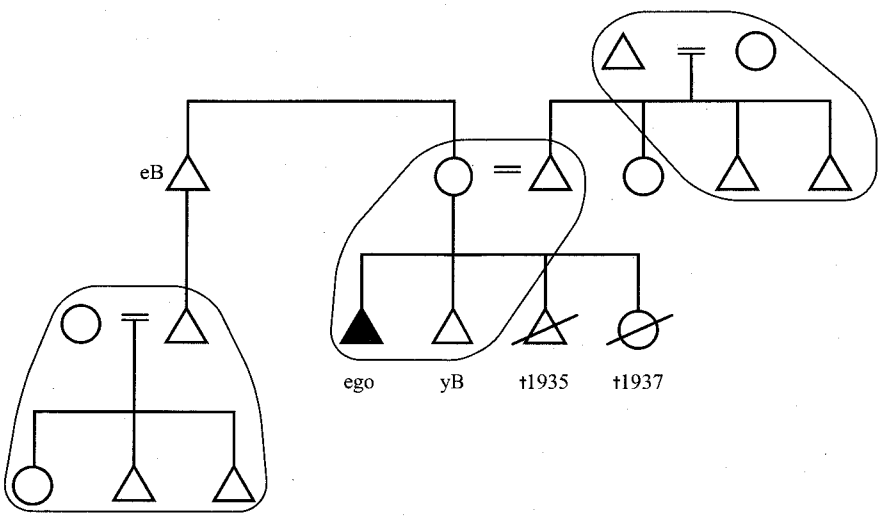


**fig.8** Vakhtangov's (ego) parents and grandparents around 1936/7-1940. The residents in each solid line formerly lived in each *yanana*, then they lived together in a single *yanana* but having separate sleeping places, and finally moved to live in different *yananas* again.

he didn't know why that brother had never got married. As a result, Vakhtangov's father was the only one out of the three who had got married. I asked Vakhtangov whether it was a custom for only the eldest son to get married. However, he told me that among the Koryaks there was no such custom as the eldest son being the only one to get married. It was up to each brother to decide whether or not he would get married.

Then he remembered who had lived in the other *yanana* that had been in that area. The head of that *yanana* had been one of his father's relatives who had also been elected as the head of the group that had made up the residential area. At that time, he was the only one among them who had owned a horse. Furthermore, in 1939, he had also been elected as the head of the *kolkhoz*. However, since he had been illiterate – as was everybody else at that time – he hadn't held that position for any length of time. He had had three sons and five daughters – two of them had married and had husbands. Then one of his sons had gotten married in 1938. His daughter's husband had lived and worked with them to help his in-laws before they had been officially married. So, to be more accurate, his daughter's husband had been "his daughter's husband-to-be." They didn't have any children for a long time, but at last, their son was born in 1939-40 before World War 2. He was apparently the "experienced man" that we had seen earlier pitching a tent made out of reindeer fur on the tundra. To the other daughter and her husband, a daughter had been born after World War 2: she still works at a school in Srednie-Pakhachi Village. As another son had been born after the war, they left that *yanana* and moved to another place.

The head of this *kolkhoz* had lived in a very large *yanana*. Three bedrooms had been made in this *yanana* as well, just like the *yanana* Vakhtangov had lived in. The main bedroom had been for the *kolkhoz* chief, his wife and their three unmarried sons (one of them later married), and was located at the rear of the *yanana*, opposite the entrance. The other bedrooms had been for the parents of the *kolkhoz* chief's wife and their three unmarried daughters (granddaughters to the chief's parents), located to the right of the entrance, and the last bedroom, which was to the left of the entrance, was for the *kolkhoz* chief's daughter and her husband-to-be, their son and the kolkhoz chief's younger brother. Vakhtangov laughed that they certainly would have been living in separate *yananas* if it hadn't been for the unusual social situation – they actually used to live in separate *yananas* before then. He said that the *kolkhoz* chief's parents had died when he was still young. Since the *kolkhoz* had already been established, he had actually never worked for his own family. However, he had been given special permission to live and work with his family, because that was customary for them.

During those days, the government tried to gather people to live upstream and midstream of the Pakhachi River, both settlements were going to form the foundation of the *kolkhozes* where people lived permanently. As a countermeasure, the family members who lived in separate *yananas* moved into one large *yanana*, and made

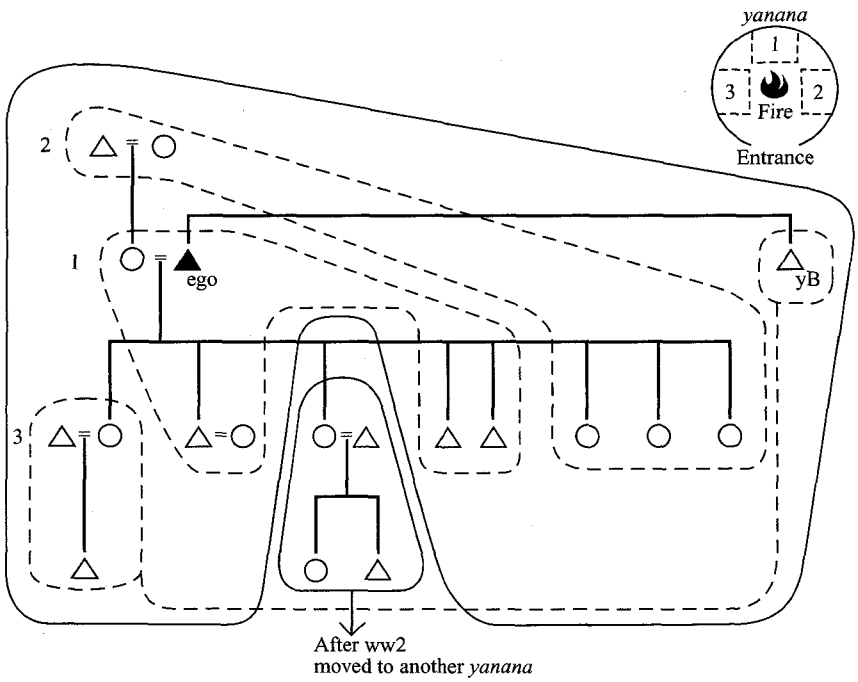


**fig.9** The chief of the *kolkhoz* (ego) and his wife's parents from 1922-1940. Dotted lines indicate the sleeping places within the *yanana*. Solid lines indicate the residents of each *yanana*.

separate bedrooms inside, in order to prevent the family from getting separated.

I felt that I was gradually becoming able to discern the outline of their society. Therefore, I asked Vakhtangov, on a separate visit, to tell me in more detail about the relationships among the people living together in the *kolkhoz* chief's *yanana*. He later continued the narrative. Apparently, the *kolkhoz* chief did not get married for a long time, and married late in his life. Before he got married, the parents of his future wife took care of him, making his clothes. Even after he and his wife had married, he lived with her parents. After a while, his wife's father died and he became the head of this family, owning a large herd of reindeer. His wife's mother lived to an old age and she later went to live with her younger son-in-law, the younger brother of the *kolkhoz* chief. Her granddaughters got married and left that *yanana*, but the brother of the *kolkhoz* chief did not get married. He had problems walking because he had been injured in a struggle with a bear.

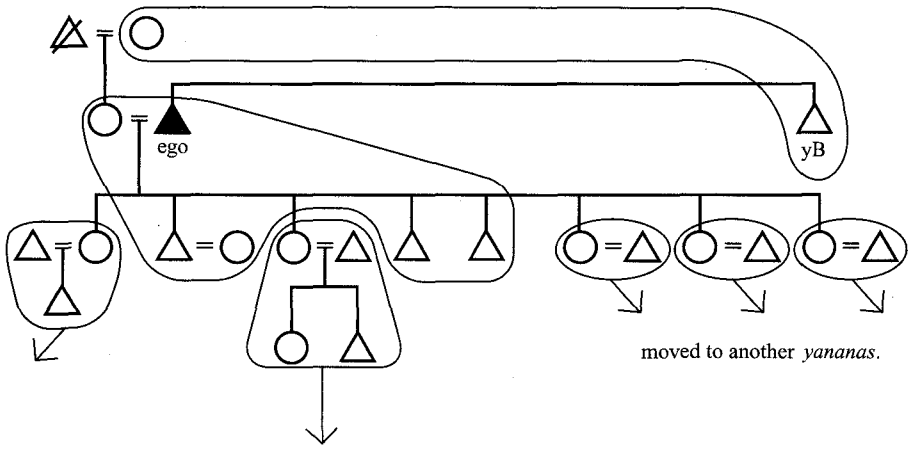


**fig.10** The chief of the *kolkhoz* (ego) and his wife's mother after 1940. Solid lines indicate the residents within each *yanana*.

Everyone in this family had owned a large number of reindeer. For instance, the *kolkhoz* chief owned 400 reindeer, and there were a total of 800 including his brother's, who lived with his mother. People who lived together usually gathered their reindeer into one herd. So when there were many members in the family, the reindeer herd got larger. If they worked hard enough, the herd gradually grew quite large after a while. When the parents grew old, they gave a number of their reindeer to their sons and daughters. Then when they died, the children's reindeer herd grew even larger. When a married couple don't have any children and the wife dies, her family takes care of the reindeer; when the husband dies, his family takes back his share of the reindeer herd.

It was at this time, around 1931, that the *kolkhoz* was established. It was stipulated that each family should own 50 reindeer and the rest would be owned by the *kolkhoz*. The same was said about horses, as an administrative official of the district told them, "The time has come to take all the horses that you own." So they did as they were told.

At that time, there were about 10-12 *yananas* built at the border between the summer pasture and winter pasture. The people who lived here were all related, although some were close and others were distant. Vakhtangov fondly remembered a certain man. He was a Chukchee, married to a woman who lived there. Everybody else there was Koryak. He was a good reindeer master, and people were satisfied with his work, because the reindeer grew wonderfully fat. However, he left the place after World War 2, because his brother, who lived in another location, had died and he had inherited his reindeer. His wife's family wanted him to stay, but that wasn't what happened. People didn't know where he had originally come from, but they knew he moved to Tolmy River, which was not very far from Achaivayam. His former wife is still living in Srednie-Pakhachi Village, although they say she has become very elderly. His grandfather and Vakhtangov's great-grandfather (on his father's side) were apparently brothers. Vakhtangov said he remembered the relatives on his father's side very well but from his mother's side he only knew his grandmother and his uncles. None of them had had any children and they themselves had passed away.

According to the traditional Koryak way of thinking, unmarried sons and daughters live with their parents in a *yanana*. Furthermore, from what Vakhtangov had told me, the daughters sometimes live together with their future husbands. When the sons and daughters get married they make a new *yanana* and are given part of their reindeer herd. The number of reindeer that they are given depends on how many their parents own, but it would be something like five to six female reindeer and two large-sized male reindeer. Even after all their children get married and move out into separate *yananas*, they live in that same *yanana* as long as they can take care of the reindeer herd. When they become too old to work on their own, or when they become ill, a son or daughter comes back with their family to live with them. There is no rule set about which family – the son's or the daughter's – should live together.

Then I asked Vakhtangov if there is a name for this group of people living together in one location, made up of a number of *yananas*. He said that this is called a *nimiyolgan*. They live in one place and control one herd of reindeer together. To refer to a particular group, they put the name of the chief of that group in front of the word. For example, they would put Vakhtangov's Koryak name *Tunagelgin* in front, and call the group *Tunagelgin-Nimiyolgan*. If someone from this group died, then they would use the name like this,

"I will go because someone has died in *Tunagelgin-Nimiyolgan*. Those who

live together in one *yanana* are called *kumigun*. This word originally means "sons," or "the son and his family including his children."

Actually, from what I heard from Vakhtangov later on, daughters are called *navakiek*, which is the abbreviated form of *navakumigun*. *Nava* is a prefix meaning "woman" and the stem *kumigun* is a word that originally means "children" including daughters. The children of their sons and daughters – i.e. their grandchildren – are called *ilgikumigun* if they are boys, and *ilginavakik (ilginavakumigun)* if they are girls; here again, *kumigun* is the stem word. The children of these girls and boys (great grandchildren) are called *petohiilgikumigun* and *petohiilginavakik (petohiilginavakumigun)*, meaning "distant (*petohi*) grandchild." Hence, the word *kumigun* itself is the name for your child, the children of that child and the children of that child's children and so on, which means it includes everybody. From the added prefix, you can see how they make a secondary classification, distinguishing men from women, and identifying their generation. Taking it from there, it doesn't contradict these names when they call the group – such as their son's or daughter's family – that lives in the same *yanana "kumigun*," as Vakhtangov had told me.

When they refer to a specific *kumigun*, just as they do with the *nimiyolgan*, they prefix the name of the family head. For example, supposing the head of this family was called *Voni*, it would be called *Voni-Kumigun*. If not, it would be called *Voni-yanana* or *Voni-yaranga*. (*Yanana* is the Koryak name for the dome-shaped tent made of reindeer hide and *yaranga* is the Chukchee name for the same thing.) Therefore, the noun *kumigun* indicates the people living there in contrast with *yanana* or *yaranga*, which means the residence itself. In addition, the word *kumigun* means the children of those people.

The reindeer are managed collectively by the people who live in one *nimiyolgan*, but they say each person knows which reindeer they personally own. Each reindeer belongs to a different *kumigun*. Of course, the head of the *nimiyolgan* owns most of the reindeer. However, after his death, the people who succeed him inherit the reindeer. Vakhtangov said at first that a *nimiyolgan* consists of family members. Then on another day he said that normally a *nimiyolgan* is formed by family members, but that didn't necessarily mean close family members such as brothers or sisters. It could be a distant relative, or sometimes it didn't even have to be a relative. Sometimes, an unrelated person could be a better worker. Anybody could come along and join a *nimiyolgan*. Especially in winter, when there is not much work to do and the festivals are held, people can easily visit other *nimiyolgans*, because they can move about the snow on reindeer-sleighs. Even Vakhtangov's parents could visit some other *nimiyolgan* and take part in a competition there. If someone thinks he wants to change his residence, he can immediately separate his reindeer from the former *nimiyolgan* and take them to the new *nimiyolgan*. Vakhtangov says that anybody is welcome to join a *nimiyolgan*. If there are only

a small number of people in a *nimiyolgan*, it is difficult to defend their group at competitions and trading occasions. When many people come from another group, those who are there become scared. They might get overrun, or they might fail to get the competition prizes. Vakhtangov says that this kind of thing sometimes happen among the Chukchees.

Traditionally, in a *nimiyolgan*, a number of *yananas* were pitched as if to form a semi-circle. The first *yanana*, built at the east end, was the largest. This was where the *nimiyolgan* chief lived. The other *yananas* belonged to his relatives. Sometimes, the *yanana* of poor people, who were not his relatives, were added to them. The *yananas* of such people were built at the end of the row. When a visitor came to this residential area, he had to visit the first *yanana* before anything else. The major part of the reindeer herd belonged to this chief. The relatives added their reindeer to this herd. A poor person could join his reindeer to this herd as well. For example, he could adjoin his 100 reindeer to this herd just for the summer, or for a few years. It is better for the reindeer herd to be gathered together and enlarged. Reindeer tend to move in one direction, so a small herd can easily go astray. There is a Chukchee saying, "a small reindeer herd is like a short lasso." In other words, it can easily be lost.

Regarding the number of reindeer, each *kumigun* needs at least 100 reindeer, if it consists of a small number of people: about 400 is appropriate for a large-sized *kumigun*. They say it is too much if there are more reindeer than that, because then diseases will start to break out among the herd. The Chukchees used to keep 5,000 reindeer at one time, but they say it is too large a number. Greedy men can increase the number of reindeer if they want to, but soon afterwards contagious diseases like foot-and-mouth disease spread, and most of the reindeer die in the end. Moreover, in the older days, people ate the best part of the reindeer meat and gave the rest to dogs. There were no problems when there were many reindeer, but when the number of reindeer becomes scarce, giving reindeer meat to dogs rapidly decreases the number of reindeer.

If someone has 400 reindeer for instance, then 150-200 fawns are born annually. More than 100 of them are killed every year to serve to guests, or used for sacrifice, gifts and prizes for competitions. This way, people don't have to worry about over-producing the reindeer; they can maintain the same number of reindeer in their herd. If the number of reindeer starts to increase uncontrollably, it is an indication there are too many of them. There are limits to the grazing land and other herders have to use the pasture as well. Therefore, Vakhtangov says, 400 is an appropriate number of reindeer for one family to make a living out of. He looks back to his life in those days and says,

"We had plenty of food and clothing. Besides that, we were satisfied as long as we had sweets, bullets and cigarettes. The Americans came in a large ship and traded

rifles and bullets. We had all that we needed. In those days, we didn't need money at all."

As I listened to Vakhtangov's story, I learned that marriage and moreover the inheritance of reindeer played an important role in the history of their society. In addition, he talked as if it were normal that the future husband would come to live with his wife's parents and have children before he was even married. So I decided to encourage him to continue talking about Koryak marriage.

### 7.2 Marriage and Rules of Life

From what Vakhtangov had told me, the Koryaks got married in the following way: Suppose someone had a daughter. Her future husband comes to live with her family. Everything is going well but after a while the future husband's relatives or parents come along and say,

"We have a problem. Two men have died in our house and we need help." The daughter's parents talk it over and say,

"OK. Our daughter and her husband can move to his family's *nimiyolgan*." Then the husband's family asks her father if they can take with them the husband's reindeer. So the husband gets his part of the wife's family's reindeer herd.

I sat there with a puzzled expression on my face saying I still didn't understand when Vakhtangov said to me he would explain it to me with some examples, and he continued talking.

> "I have a daughter. She started going out with a gentleman. After a while, she got pregnant and a child was born. The gentleman told me he wanted to marry my daughter, but I didn't let my daughter marry him yet because I didn't know him well enough to trust in him. Having a child is not a prerequisite to make a new family. The child is our child. So I told this man 'learn and acquire some technical skill. Then I will decide whether you have the ability to have a family and whether everything will go well with my daughter.' The gentleman went to Achaivayam and after studying, became a tractor driver. After a while, he came back to me with his father. At that time, the child was about 4- or 5-years old and had grown bigger. The man said to me 'I have studied sufficiently. I cannot study more than I have.' His father started to beg me to permit his marriage as well. So I answered yes."

Vakhtangov allowed his daughter marry this gentleman and let her move to Achaivayam, where the husband's family lived. Then the man came back with a small gift. This wasn't anything special. When the daughter left to go to her husband 's place, Vakhtangov gave her a few of his reindeer.

It is said that the head of a family thinks about whom he should pass his reindeer on to, before he dies. Vakhtangov started to talk about himself as an example again.

"For example, I'm still alive but am old. So I am thinking who would be the best person to give my reindeer to. I think about this so that my family will not fight over it after I die. I'm thinking of giving most of my reindeer to Alekseev. I have already given part of it to my younger brother. The few leftover reindeer, I will keep to myself. I am keeping this because my other son Ezhik (Alekseev's younger brother) might get married while I'm still alive, so I'm keeping it for the occasion. If they are always drunk and not working, their reindeer will disappear. I don't want to see my reindeer vanish, so I still haven't made up my mind how many reindeer I should give to each one of them. But I feel like giving them all away while I'm still alive."

Certainly, marriage is something that is directly related to the inheritance of reindeer, which was exactly why he had to make absolutely sure if the man his daughter was to marry really deserved to be her husband. Vakhtangov went on in more detail about how the future husband lived with the bride's parents before getting married. Prior to their marriage, the husband-to-be lives with the bride's parents and works for them. This is called *kunevinnyung* in Koryak. For instance, the husband of the *kolkhoz* chief's eldest daughter lived with the family for five years. Having finished the *kunevinnyung*, he left the *nimiyolgan* where his wife's parents were living and got a *yanana* of his own, and moved to the *nimiyolgan* where the husband's brother lived. The future husband does anything his wife's father tells him to do, whether it may be looking after the reindeer or hunting. The parents give him orders about what to do, but he has to decide for himself how to do it. They watch closely how he goes about their orders. They actually test him in various ways. For example, if the father rides a reindeer-sleigh in the deep snow, the future husband has to dig the way for him ahead of the reindeer. This requires the great feat of running as fast as the reindeer. He works as hard as anything does for three years, burning himself out like a torch. If he overcomes the ordeal, he is accepted as a trustworthy man. It is not until then that all the members of her family establish a good relationship with him and treat him nicely.

Then after a while his father visits the bride's father and they discuss the marriage. If the bride's father has a son, he will be present at this occasion as well. If they come to an agreement about the marriage, the future husband's father walks out leaving his son there. It is up to the new couple to decide where they will live after getting married. Even though his daughter is married to this man, her father can't make them stay at the *nimiyolgan* where he lives. When the labour prior to getting married, *kunevinnyung*, is finished, the new couple can decide freely where they are going to live. Vakhtangov said that everybody wants their new son to live close to them, but that depends on what the son decides. The son wouldn't want to do something to upset his wife's family, but if the family were pitiless, he probably wouldn't live in the same area. At the end of the day, the final decision is up to him.

As Vakhtangov said before, the chief of the *nimiyolgan* wants to keep as many

people living there as possible. As reasons for this he mentioned that reindeer herds are easier to take care of in large herds, when they can be managed in collaboration, and that a larger group could compete more effectively against other groups at competitions. In fact, there was another advantage to this. If there are a large number of people in one *nimiyolgan*, other than grazing reindeer, some can go out to hunt, others can go fishing and someone else could be a good wrestler. Moreover, if there is a fast runner, he can spread the news to the other *nimiyolgans* very quickly. Vakhtangov started to talk about the festivals again, saying that a strong competitor could win the race and gain reindeer as a prize – he emphasized that this was very important for them. In other words, a large-sized *nimiyolgan* had the advantage of keeping manpower. They could not only divide the subsistence activities among themselves in a varied way, but could maintain enough power as a group to compete with other *nimiyolgans*.

It is important for their survival that they can divide their activities among the *nimiyolgan*. By gathering the reindeer herd into one and collaborating with others to graze them, they can assign the surplus manpower to other activities; which means they can herd reindeer and hunt or fish at the same time. This is a big difference compared to the lives of Canadian Forest Indians, who are wild-reindeer hunters. Different livelihood activities such as hunting, fishing and gathering are included in the daily lives of Indians, but they are performed by the same person in accordance with seasonal changes. However, the reindeer-herding Koryaks keep the reindeer throughout the year, and at the same time can develop other types of activities by dividing the tasks among various people within the *nimiyolgan*. On the other hand, sometimes there are residential areas that only consist of a single *yanana*. When someone is lazy and doesn't work or when someone doesn't get along well with others, that family ends up living far away from the others. But it is difficult for just one family to take care of a reindeer herd. If that person gets sick, there is no one else to take care of the herd. Therefore, the more families there are, the better it is for a *nimiyolgan*.

It is true that reindeer-herding itself is a very tough job, running after the herd all day long, as is the case in summer. However, with the exception of the few herders who do that, the other herders stay at the border between the summer pasture and the winter pasture and get time to concentrate on other activities. This is the key survival strategy of the reindeer herders, which differs from that of the hunters; this is why the chief of a *nimiyolgan* tries to get as many people as he can to live there.

From Vakhtangov's story, we can see that there is a competitive relationship between different *nimiyolgans*. He put strong emphasis on the differences of strength between the *nimiyolgans* regarding the competitions, but the result probably has some influence on real life such as the usage of the reindeer grazing land. Indeed, the Chukchees increased their territory to the south of Anadiri River, for their reindeer

herds, by battling against the Koryaks. The competitions held at festivals were symbolic battles, where they flaunted the power of the *nimiyolgan* to each other. By admitting their defeat or acknowledging their victory there, it may have helped prevent real clashes between the *nimiyolgan*. Their competitions held at festivals were not just entertainment, but were symbolic fields of battle displaying the rival relationships between *nimiyolgans*. That was why Vakhtangov repeatedly talked about the competitions when he was talking about the annual cycle or about the traditional nomadic lifestyle from the old days. His animated way of talking, and the enthusiasm shown by his son Alekseev or Slava – Alekseev's son – when he spoke happily, but earnestly about the competitions held today probably derived from this symbolic battle.

Now, once a marriage is approved and the daughter is to leave her parents, the father gives a banquet. This is, so to say, a kind of wedding ceremony, and is called *kogavennyaitaten* in Koryak, which means "to capture the wife." Many guests are invited and a lot of dishes are served. Then reindeer-sleigh races and dog-sleigh races are held. After these are finished, the father breaks the reindeer herd up and gives part of it to his daughter as he tells her, "This is yours." There is no special name for these reindeer the daughter takes with her. Looking at it from Vakhtangov's viewpoint, the reindeer are "given to the daughter," but from the viewpoint of the husband's family, they are a reward for the husband's efforts – the *kunevinnyung* – and they interpret it as if they were "given to the husband." This discrepancy leads to the case where both families claim the reindeer when either one of the couple dies – as Vakhtangov told me earlier. It also leads to the strange Koryak custom of remarriage, as I later found out.

While a banquet is given at the *nimiyolgan* where the wife's parents live, the husband's family also prepares for a feast too. They wait for the new wife to arrive. The party held there is grander than the one held at the wife's home, and Vakhtangov says that the feast held there is the equivalent of a formal wedding ceremony. Many people get together, and all the amusements such as alcohol, *mukhomor* and reindeer-sleigh races are there.

The husband's family doesn't come to the wife's residential area. The wife's family accompanies her to the husband's residential area, where his family awaits them. The wife goes there on a reindeer-sleigh. The wife and husband go on separate sleighs. The wife's parents, brothers and sisters accompany her – although unmarried sisters stay behind at the parents' residential area. Married sisters take their husbands with them. The wife's aunts and uncles can come with them as well, but it is not compulsory. When they arrive at where the husband's family is living, the reindeer are kept separated from the reindeer of the husband's family until the required ceremony is over.

The ceremony starts with a ritual reindeer sacrifice. They choose a male

reindeer, which is used for pulling reindeer-sleighs. It is killed and an *inawet* is made. If they are living near the sea, the offering is made to the sea. On the other hand, if they live inland far from the sea, they make the offering to the land. When they finish this ritual, they celebrate. They hold reindeer-sleigh races, and a lot of *mukhomor* is prepared for the guests, who are deeply satisfied with it. Those who don't eat *mukhomor* drink alcohol. A great number of dishes are served, and the entertainment begins.

According to Vakhtangov, this is a real ceremony of the *mukhomor*. It is a ceremony held by a group of people, different from other *mukhomor* ceremonies. He said it reminded him of his family's wedding. The family members accompanied his sister. They left the Tilichiki Village at the Vivenka River mouth in September and finally came back the following spring. After having eaten a lot of *mukhomor*, they came back because spring had come and it was time for the fawns to be born. Vakhtangov said some of them came back much skinnier than before for having eaten a lot of *mukhomor* without eating their meals.

In celebration of the wedding, they hold reindeer-sleigh races, dog-sleigh races, foot races, wrestling, ball games and tugs-of-war. They also compete to see who can best catch a reindeer with a lasso. They use a reindeer that has had its antlers cut off in order to make it harder to catch. There is also another competition where they punch a hole in the hooves of two reindeer and tie them together, then compete to take those reindeer out of the herd. The old man who supervises the contests picks out the man who is going to marry next, and makes him compete. If he succeeds in the competition, he takes these reindeer to his future wife's family and tries to win trust from her father. This competition is called *kungevilnyon*. In fact, this name doesn't only refer to this specific contest, but is used to refer to all the competitions in general.

In the tug-of-war, men who come from different residential areas divide themselves into two groups and pull the rope against each other. When one group loses, they thrust a challenge at the other group by asking for a wrestling match. So the wrestling begins and they compete to see who is the strongest. It is fought among men, in the same way the male reindeer fight against each other. Women wrestle too, because female reindeer fight against each other as well as the males.

Young men visit this residential area just to participate in these celebratory competitions. When one such man arrives, before he enters a *yanana* to have a meal, he leaves the reindeer-sleigh nearby and goes out to gather firewood, which he carries on his back. Then he says,

"Who will wrestle against me?" By saying so, he flaunts his courage. If nobody can defeat him or if nobody tries to challenge him, he can enter any of the *yananas* in that area.

"My uncle was a strong wrestler like that." Vakhtangov said and laughed.

Regarding their marriage, I wanted know what kind of relative was preferable to marry, or what kind of relative they couldn't marry. However, in order to understand this, I first needed to know what they called their relatives and how they classified them. I was interested in where they actually drew the line between "close family members" and "distant relatives," which he often mentioned when he talked. I was also interested in how that was related to marriage. In order to understand all of this, I had to consider the relation between marriage and their society once again. I imagined this would be a time-consuming procedure, but I decided to ask Vakhtangov bit by bit about the Koryak nomenclature for relatives when he seemed to have some free time.

### 7.3 Names of Relatives and Marriage Restrictions

Relatives are called *haitumug* in Koryak. This word includes people who are related to each other through parenthood, and all those who are related due to marriage. It is the equivalent word for *shinrui* (kinsfolk) or *shinseki* (relative) in Japanese. It includes those who are of the father's lineage or of the mother's lineage, and the two are not distinguished by any names. For example, "our relatives" would be *muchigen-haitumug*. Or "my wife's relatives" would be *nevenin-haitumug*, where the modifier prefix means "of the wife." Even if you don't know someone's parents or grandparents in person, if you are related to that person in a higher generation, then both of you are their ancestors; you are *kumigun-haitumug* which means, "relative of a descendant." There are no distinctions between men and women here either, which means it includes both of them. *Haitumug* is a noun in general that means "relative" in Koryak, and there aren't any other kinship groups that consist of relatives distinguishing the father's lineage or the mother's lineage. Nevertheless, Vakhtangov says that people take better care of the father's lineage. This owes to the fact that the reindeer are mainly passed on from the father to the son.

Brothers are called *haitakan*. The same word is used for the elder brother and the younger brother. If you want to distinguish them by their age, the elder would be *inpichiin-haitakan* and the younger would be *ichanyochiin-haitakan*. If there are three of them and you want to refer to the one in the middle, it would be *witgiken-haitakan*. Sisters are called *chakijet* in general. They are also called *chake* for short. Just as it was with the brothers, the elder sister is called *inpichiin-chakijet*, the younger is called *ichanyochiin-chakijet*, and the middle one is called *wetgiken-chakijet*. In other words, the words for brothers and sisters differ from its gender, but the stem of the word to distinguish their seniority is the same - if they want to distinguish them by their age, they use a prefix. What's more, when the speaker is a female and wants to refer to her brother, she uses the word *icham*, and to refer to her sister, she uses the word *chaketitomugin*. Different words are used between female speakers and male speakers.

A father is called *tata* in Koryak, whereas in Chukchee he is *enpichi*. On the other hand, a father calls his son *kumigun*, although he calls him by his name when he talks to him directly. A daughter is called *navakik* or *navakek*, which is the abbreviated form of *navakumigun*. *Nava* is a prefix indicating "woman," thus *kumigun* must be a word that refers to "children" including both sons and daughters. This can be said by looking back at the fact that they call their children's family living in a *yanana* "*kumigun*." The mother is called *anya*. However, Vakhtangov called his mother *illa*, which he explained was the word that a wife uses to refer to her husband's mother. I later came to find out that *anya*, which means mother, is also the word for "grandmother," who is one generation older. Vakhtangov seemed to call his mother *illa* to distinguish her from his grandmother.

When referring to great-grandfathers or great-grandmothers, they put a prefix meaning "distant" in front of the word *apapo* (grandfather) or *anya* (grandmother) and call them *pitohe-apapo* or *pitohe-anya*. For a great-great-grandfather and great-great-grandmother, who are a generation older, they put a prefix meaning "further distant" in front and call them *eto-pitohe-apapo* or *eto-pitohe-anya*. Mothers are also called *vava*, which is a Chukchee word. Vakhtangov, who was answering my question, said that he sometimes used this Chukchee word and called his grandmother *vava*, and his great-grandmother *petohi-vava*. Here he used Chukchee and Koryak words without consciously distinguishing between them.

A father's brothers are called *innif*, although the father's younger brother can also be called *tatape*, which means "small father." Nevertheless, in reality, whether or not he is alive or dead, the father's brothers can never become the mother's spouse. They can also call their father's elder brother *apapo*, which is the word for grandfather. The term *innif* is also used for a mother's brothers. It is the equivalent word for "uncle." A father's sisters are called *ichai*, which is also the word for a mother's sisters; and is the equivalent for "aunt." On the other hand, in reply to those who call them this name the uncles and aunts use *illibe* for boys and *naville* or *navie* for girls - this is an abbreviated form of *nav-illibe*. In other words, *ilibe* or *nav-ilibe* is the word used to call a nephew or a niece - the son or daughter of one's brother. This is also used for a sisters' son or daughter.

A father's brother's child - i.e. cousin - is called *yella* if he is a boy and *nav-yella* if she is a girl. The full forms of the words are *yella-nitungen* and *nav-yella-nitungen*. These words also refer to a father's sister's children, and are also used to refer to the children of the mother's brothers and sisters. That is to say, the Koryaks don't distinguish between cousins on the mother's side and the father's side. Moreover, they don't differentiate between "parallel-cousins" - the children of the father's brothers or of the mother's sisters - and "cross-cousins" - the children of the father's sisters or of the mother's brothers, calling them all *yella* or *nav-yella*. This means they use a different word to refer to them from that used for the children

of their brothers or sisters. In addition, a cousin will call you "cousin" as well. A child of that cousin is called *illibe* if he is a boy and *naville* (*nav-illibe*) if she is a girl. This word is the same word used to refer to your own nephews or nieces - the children of your brothers or sisters. In other words, when referring to those who are one generation younger than yourself, your own children are the only ones who have a different word to that used for other relatives of that generation.

A son is called *kumigun* and a daughter *navakik* (*nava-kumigun*). Their children, or grandchildren, are called *yelgi-kumigun* if they are boys and *yelgi-navakik* (*yelgi-nava-kumigun*) if they are girls. Their children, who would be great-grandchildren, are called *petohi-yelgi-kumigun* or *petohi-yelgi-navakik* (*petohi-yelgi-nava-kumigun*). According to Vakhtangov, the children of your nephew or niece are called *yelgi-kumigun* or *yelgi-navakik* (*yelgi-nava-kumigun*), which also refers to your grandchildren. These terms are also used to name your cousin's grandchildren. Hence the generation of your grandchildren, who are two generations younger than yourself, are called *yelgi-kumigun* or *yelgi-navakik* (*yelgi-nava-kumigun*). Those of the generation after them, or the generation of your great-grandchildren, are called *petohi-yelgi-kumigun* or *petohi-yelgi-navakik* (*petohi-yelgi-nava-kumigun*).

The important fact here is that the *yelgi-kumigun* cannot marry each other, but the *petohi-yelgi-kumigun* (*petohi-yelgi-nava-kumigun* for women) who are more "distant" in kin, can marry each other. From what Vakhtangov says, the *petohi-yelgi-kumigun* are part of the *petohi-haitumug*, who are the "distant relatives," distinguished from the *haitumug* which means "close relatives." Therefore, your grandchildren, who are two generations younger than you, cannot marry each other, but your great-grandchildren, who are three generations younger, can get married. To put it the other way, you cannot marry someone whose grandfather or grandmother (two generations older) you have in common, but you can marry someone who has a great-grandfather or great-grandmother (three generations older) in common. Those who have a grandfather or grandmother in common would be the children of your parents' brothers or sisters -i.e. your cousins who are called *yella* or *nav-yella*. Paraphrasing this, it would mean that both your parents are brothers or sisters. Your relatives who have a great-grandfather of great-grandmother in common would be those whose parents are cousins with your parents; they would be your second cousins. A second cousin is called *petohi-yella* or *petohi-nav-yella* in Koryak, meaning a "distant" cousin. In other words, you can't marry your cousin but you can marry your second cousin. Furthermore, Vakhtangov told me that you can marry the *eto-illibe* and *eto-nav-illibe*. This means the grandchildren of cousins can get married to each other, which is just putting in another way what he had said before; your grandchildren can marry each other, or a *petohi-yelgi-kumigun* can marry a *petohi-yelgi-navakik* (*petohi-yelgi-nava-kumigun*). If they get married, their family and relatives become close relatives again.

These are the kinds of relatives that Vakhtangov referred to when he had talked about close relatives and distant relatives that live in a *nimiyolgan*, the residential group. The very prefix *petohi* was the restricting marriage guideline that set the border between those who couldn't marry each other and those who stood outside that circle and could become their spouses.

Family members and relatives consist of blood relatives such as parents, sons and daughters who are blood-related, and relatives who are related through marriage. The names of the relatives that Vakhtangov had told me up till then were all names regarding blood relatives. Therefore, I decided to ask him if there were other names for the *haitumug* (relatives) related through marriage. A man's father's brother's wife is called *inte*. But she calls him *matain* in return - i.e. the son of a husband's brother is *matain*. Your own brother's wife is also called *inte*, and she calls her husband's brother *matain* in return. The wife of your brother's son is also called *inte*, and she calls you, the brother of her husband's father, *matain* as well. In addition, the word *inte* is also used to refer to your own son's wife, and she calls you, your husband's father, *matain* too. These terms are also used for the relatives by marriage on the mother's side.

The husband of your father's sister is called *intevilpi*, whereas he calls the son of his wife's brother *matain*. In the same way, the sister's husband is called *intevilpi*, whereas the brother of the wife's mother is called *matain*. Your daughter's husband is also an *intevilpi*, whereas the wife's father is a *matain* too. These names go with the relatives by marriage on your mother's side as well. Thus, you will call the spouse of your parents' brother, your brother's spouse, the spouse of your brother's children, and your children's spouse *intevilpi* if he is a man and *inte* if she is a woman; and they will call you *matain*. In other words, these names are used for the relatives on both the father's side and the mother's side without any distinction of generation; they are only differentiated by gender. If the speaker is a woman, you are called *nav-matain*. This means that to refer to relatives by marriage they use totally different names from what they use to call blood relatives, without differentiating much of the generation or relationships.

I have already mentioned that your wife's father or brother is called *matain*, but the sons of your wife's brothers or sisters are also called *matain* and the daughters are called *nav-matain*. The term is also used when the speaker is a female; your husband's father or brother and the son of your husband's brother are called *matain*, and if it's a daughter she would be called *nav-matain*. A husband's mother is called *illa*, as Vakhtangov had told us before. Furthermore, the wife of your husband's brother is called *inteyotomgin*, which wives use to call each other. Hence, when referring to a spouse's father or brother or sister, or the children of a spouse's brother or sister, they use the word *matain* if he is a male and *nav-matain* if she is a female. This means they use different words to name your blood relatives' spouses from

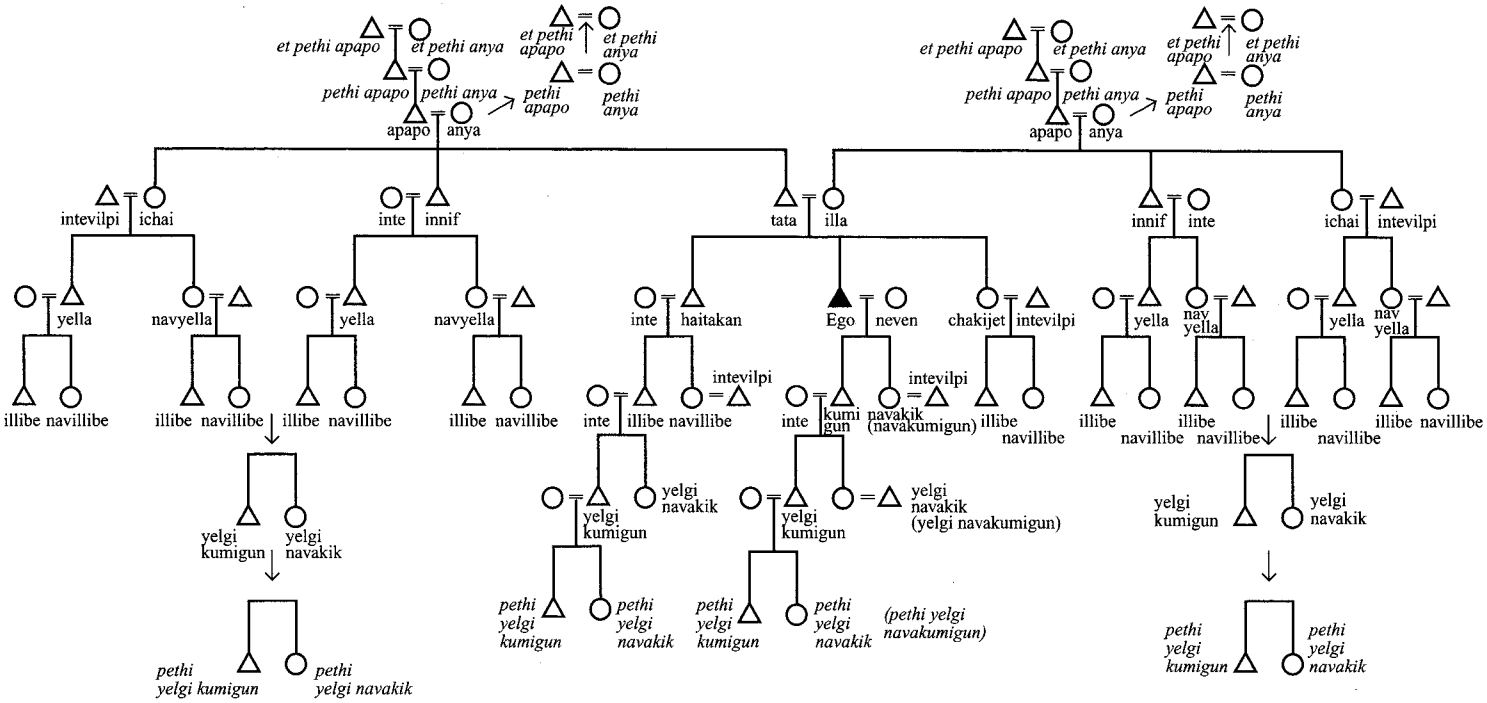


**fig.11** Kinship chart showing relations to oneself (ego). Relations in italics represent distant relatives.

**table.5** Olyutorskii Koryak kinship terms.

| Terms | Kin Relations |
|---|---|
| *anya* | FM, MM, M (cf.*illa*) |
| *apapo* | FF, MF |
| *chaketitomgin (wn.sp.)* | Z (sister) |
| *chakijet (mn.sp.)* | Z |
| *haitakan (mn.sp.)* | B |
| *herawo* | H |
| *ichai* | FZ, MZ |
| *icham (wn.sp.)* | B |
| *illa* | M (cf.*anya*) |
| *illibe* | BS, ZS |
| *innif* | FB, MB |
| *inte* | FBW, MBW, BW, SW |
| *intevilpi* | FZH, MZH, ZH, DH |
| *kumigun* | S |
| *matain* | WF, HF, HB, WB,<br>HBS, HZS, WBS, WZS |
| *navakik (<navakumigun)* | D |
| *naville (<navillibe)* | BD,ZD |
| *navmatain* | WM, HM, HZ, WZ,<br>HBD, HZD, WBD, WZD |
| *navyella (-nitungen)* | FBD, FZD, MBD, MZD |
| *neven* | W |
| *tata* | F (cf.*enpichi*) |
| *yelgi kumigun* | SS, DS |
| *yelgi navakik* | SD, DD |
| *yella (-nitungen)* | FBS, FZS, MBS, MZS |

Notes : They say that *enpichi* is originally Chukchee. Mother is called *anya* or *illa*, the latter of which may be used for HM. FM and MM is called *vava* in Chukchee. FB and MB is *innif*, but FyB can be also called small Father, or *tatape*, and FeB can be called *apapo*, which originally means grandfather.

spouse's relatives. They are also distinguishing blood relatives from relatives by marriage here by using different names.

Finally, Vakhtangov said that he calls his own wife *neven*, and that wives call their husbands *helawo*. For example, "my husband" would be *gunnen-helawo*. The *nev* used in *neven* - the name to call your wife - is the prefix indicating "female" that is seen in common among the words *nava-kik* (*nava-kumigun*), meaning "daughter",

*naville* (*nav-illibe*) which refers to a brother or sister's daughter, *nav-yella* which is the word for a female cousin, or *nav-matain* which is used to call female relatives by marriage. In these terms, used to refer to relatives, the stem of the words is the same, but you can see how they use gender as a guide when classifying relatives. In fact, the names used to refer to your parents, grandparents and above, your parent's brothers or sisters (uncles and aunts), and your brothers and sisters are completely different for males and females. When a husband addresses his wife directly, he doesn't use the word *neven* but calls her *mai*. His wife doesn't call him *helawo* either, but says *mai* as well. In other words, *mai* is a word used between a husband and wife to address each other; the husband uses *neven* when he talks about her to another person, and the wife uses *helawo* when she talks about him to other people.

Vakhtangov has used these terms when referring to his relatives from when he was a child, following the custom, without thinking about it much. Now that I had asked him about them, he was sometimes left in deep thought and gradually came up with detailed answers one by one. One morning, he came over and handed me a piece of paper from a notebook that had something like a picture drawn with a green ballpoint pen. He said he had thought overnight about the names of the relatives that he had got a little confused about the previous day when I had asked him about them. It was a beautiful drawing. Some pairs of small circles were drawn from top to bottom. The top pair of circles were his parents, then the ones below were him and his wife, the ones below that were his son and daughter, the ones underneath that was their grandson and granddaughter, and the ones at the very bottom was their great-grandson and great-granddaughter. Inside the little circles that indicated the direct family, the words used to refer to them were written in Russian. From each small circle pointed an arrow upward to the father and mother's generation, and he had written what each of them calls the father at the end of those arrows. So on the left side of the top circle that indicated the father, the words for father, grandfather, great-grandfather and great-great-grandfather were written in order horizontally. The words for mother, grandmother, great-grandmother and great-great-grandmother were written across in order on the right side of the small circle that stood for the mother. Therefore, this diagram showed what you would call the person in the generations above you, as you moved down a generation. When I asked Vakhtangov about these names, I had started off in a fixed position and asked him what he would call the relatives in the older generation and then about the younger generation - expanding the question above and below his own generation. But Vakhtangov's way of thinking was different; he moved himself down to younger generations. Then regarding the brothers and sisters of his own generation, he had drawn a horizontal line between the third and fourth generation from the top and had extended it with an arrow on both sides. The left side was for the brothers and the right side was for the sisters. On the sides of the fourth generation, he had written his father's brothers

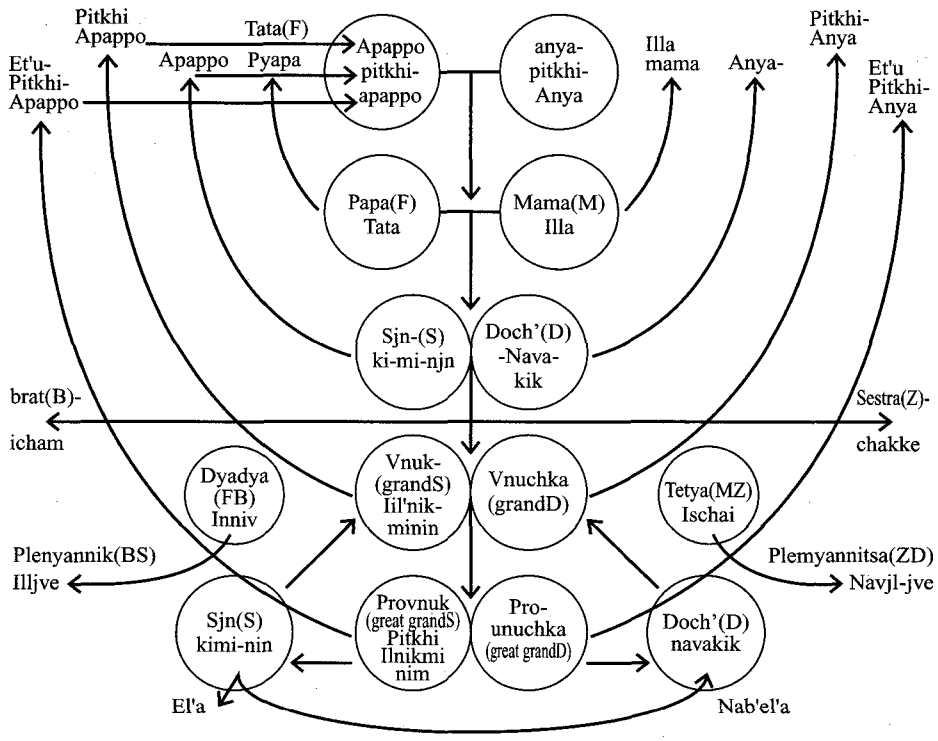


**fig.12** Vakhtangov's drawing of Olyutorskii Koryak kinship terms.

on the left side and his mother's sisters on the right side. Then on both sides of the pair of circles that indicated their great-grandchildren - the fifth generation - he had drawn horizontal arrows, which pointed at another small circle on each side. In those circles, he had written the word *yella*, meaning a male cousin, and *nav-yella* meaning a female cousin. In addition, at the end of the arrow that extended diagonally downward from the circle of the fourth generation, he had written the word *illibe*, indicating a nephew - a brother's son - and the word *nav-illibe*, indicating a niece - a sister's daughter.

Naturally, this diagram was very difficult to understand because the position of the speaker altered. However, Vakhtangov said that he had finally reached this diagram after having drawn many rough copies by drawing line after line and erasing them. After all, what was most important was that this drawing expressed his way of thinking - how Vakhtangov acknowledged his relatives. He had a kinetic way of thinking, as he moved down the generations himself. Moreover, it was a world where the direct family - the parents, their children and their grandchildren and so forth - formed the axis, the brothers, sisters, cousins, nephews and nieces extending horizontally from there, males positioned on the left side and females on

the right. The strong strokes of the arrows indicating in order the generations from top to bottom seemed to imply the continuity of life, and I was delighted to see them because it seemed like I was looking into the living world of the Koryaks. Even though the diagram was complicated, Vakhtangov was smiling and looking a little sheepish.

## 7.4 The Renewal of Marriage and Reindeer Inheritance

What was important when asking Vakhtangov about the way they referred to their relatives was how this was linked to marriage. Vakhtangov had already told me that *pitohe-yelgikumigun* are included as *pitohe-haitumug*, or "distant relatives," and that they could marry each other. On top of this, now he told me about a very interesting custom regarding the marriage among Koryaks. Between two brothers, when the elder brother is married without any children, and if he dies, the widow remarries the son of her husband's younger brother. On the other hand, when the wife of a couple without children dies, the husband remarries the daughter of his wife's younger sister. People will say about this kind of marriage that "He is marrying the daughter of his wife's younger sister," or "She is marrying the son of her husband's younger brother," and it is called *koyoipin*. This word means "to renew" or "to make a recovery." Keeping to the Koryak customs, a widow can't remarry her husband's brothers. In fact, she can if he is her husband's cousin and is younger than her husband. On the other hand, after the wife dies, her husband doesn't remarry her sister as a general rule, but if she is younger than his wife – that is to say, if she is her younger sister and is still single – he can marry her. Concerning the reason why the brother's son has to marry the widow, Vakhtangov explained that if he didn't marry the wife of his father's brother, the wife's family would take all the property, leaving the dead husband's family to lose it all. After the husband's death, the widow's family comes and takes everything with them. When they talk about "property" here, it goes without saying that the reindeer herd is included.

Vakhtangov said that it is possible for a man to marry his wife's younger sister's daughter at the same time, even if his wife hasn't died. The Koryaks accept polygamous marriages, where one husband is married to a number of wives. Then again, polyandrous marriages – where one wife is married to more than one husband – are also admitted, though it is uncommon. Then Vakhtangov, after thinking about it for a while, said there was another curious way of getting married. He was talking about a form of marriage called *yoipenen*, which is a combined form of the two ways that I mentioned above of remarrying when one of the married couple dies. Using this method, Vakhtangov said that he could force his younger brother's son (i.e. his nephew) to get married. In other words, if Vakhtangov annulled his marriage with his present wife and remarried the daughter of his wife's sister or of his wife's brother, following the Koryak custom, his nephew would have to marry

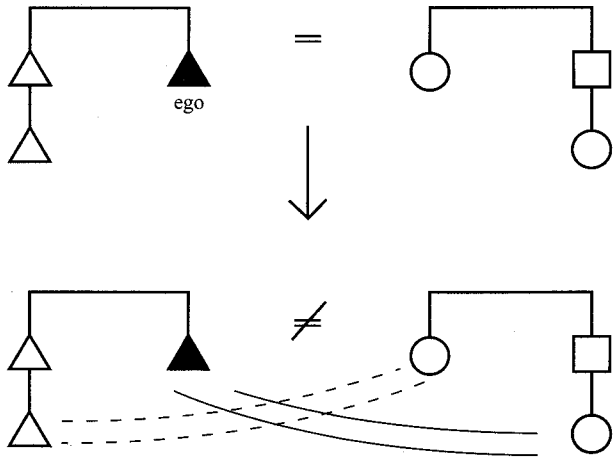


**fig.13** *Yoipenen.* If Vakhtangov (ego) divorces his wife, and he remarries with the daughter of his wife's brother or sister, his nephew (Vakhtangov's brother's son) must marry Vakhtangov's ex-wife.

Vakhtangov's ex-wife – even if he didn't want to. When I asked Vakhtangov if he could really marry the daughter of his wife's brother or sister – she would be a generation younger than him, which meant she would be quite a lot younger – he said he could if the daughter was single. Then again, his nephew would have to marry Vakhtangov's ex-wife although she may be a generation older than him.

Vakhtangov went on to say.

> "In any case, we have to maintain our father's lineage. If not, the wife's family will take away our property. The reindeer are mainly inherited along the father's lineage. The wife surely has the reindeer she was given from her family, but that is the fruit of the husband's long labor at the house of the wife's family before getting married."

Then he added,

> "So when the reindeer come to the husband's family's place, they partly give them away to their sons as early as possible before the husband gets too old. The eldest son gets the major part of the herd, but the other sons manage to get some as well. They divide them up among the sons so that even if the husband dies, the wife's relatives won't take away all of them."

In other words, this peculiar custom of marriage among the Koryaks all comes from the inheritance of reindeer. It is a form of marriage that they devised in order to prevent the family of the widow or widower from inheriting the reindeer belonging to the couple, when the couple doesn't have any children and one of them dies. The very reason why the younger brother's son marries the elder brother's wife, when an

elder brother dies, is to prevent the wife's family from taking away the reindeer that was originally given to him by the brothers' father, and to bring the reindeer back to the father's lineage again. This means the marriage partner of the widow doesn't necessarily have to be the son of the husband's younger brother, but can be the son of the husband's elder brother. Moreover, based on this concept, it may seem like the husband's younger brother could marry the widow, but among the Koryaks, there is a strong tendency to avoid each other between the wife and her husband's brother; he hardly ever talks to her or even looks at her in the face. In addition, the late husband's sisters are probably married to men from other families, so there's no way their sons can be the marriage partners in order to inherit the reindeer, when the purpose is to pass the reindeer down the father's lineage. As a result, the person who the widow remarries turns out to be the son of the late husband's brother.

On the other hand, when the wife dies, the husband's family will take away all the reindeer, so the daughter of his wife's younger sister marries the husband. In Vakhtangov's case, his wife's younger sister is already married, so she has a husband from another family – different from her own father's family – which means the husband's family will make her marry to increase the number of their reindeer. Following this way of thinking, if the wife dies, the husband ends up remarrying the daughter of the wife's sister. Vakhtangov had said that the remarrying partner could be the daughter of the wife's brothers, but in that case, the family of the wife's father would ask for the reindeer. Looking at these cases, we can say that when either of the married couple dies, they believe the family of the widow or widower has the right to inherit the reindeer. However, in order to prevent this, they send out another remarrying partner from the family of the late husband or wife. The purpose of this marriage is to "renew" the matrimonial relationship.

From the examples that Vakhtangov gave us, we can say the following: If Vakhtangov suggests a divorce, since he is responsible for it, his wife's family has the right to take the reindeer. Furthermore in this case, when Vakhtangov dies, his wife will marry his nephew, or if his wife dies, he will have to marry the daughter of his wife's brothers or sisters. Foreseeing this, if he divorces his wife beforehand and marries the daughter of his wife's brother or sister, he can make his wife marry his nephew and take back all the reindeer in the hands of the young nephew. We can interpret this as a measure to take back all the reindeer into the father's lineage.

The Koryaks also have a system of child-adoption if a couple doesn't have any children. This is called *kumigelhil*. The reason of adoption is inheritance. They adopt their brother's son, or it can also be their brother's daughter. If there aren't as many sons or daughters in the brother's family, he can adopt the children of the brother's son or daughter. This is not only limited to the brothers: they can also adopt their sister's sons or daughters, or even the children of the sister's son or daughter. He said the important thing is whether there are enough children in that family to make

an adoption or not. They don't keep it a secret from the adopted children who their real parents are. They can go to their original parents' place whenever they want to. After all, he says, they come back to their foster parents' place. The adopted children are always with their foster parents, whom they admire and are thankful to. They say the adopted children think of their foster parents as a closer family than their real parents.

Talking about this reminded Vakhtangov of an actual family and he started to tell me about them. There is a boy named Ivan at Maria's house, who was adopted by Maria's father and was originally his nephew. They adopted him because Maria didn't have any children, as will be explained later on. Maria's father didn't have any sons, which meant they needed a male in the family to pass on the reindeer; so they adopted him. Maria's grandfather and Ivan's grandfather are cousins. In other words, Maria's great-grandfather and Ivan's great-grandfather are brothers. According to the names they use to refer to their relatives that Vakhtangov had told me before, they were cousins with the same grandparents (*petohi-apapo*). To be accurate, they were second cousins, or *petohi-yella*, which meant they were "distant cousins." Maria's father had adopted the son of his "distant cousin"; here we can see that the general rule, which Vakhtangov had told us, of adopting the brother's son has been extended to adopting the second cousin's son. The two are both great-grandsons, or *petohi-yelgikumigun*, and are *kumigun-haitumug* which means they are relatives of descendants who have their grandparents in common.

Ivan's father had been married before; he had divorced his wife who was younger than his remarried partner. When he remarried, Ivan was born and he became a father. Then Maria's father adopted Ivan. The new wife of Ivan's father is the widow of Ivan's father's mother's elder brother, so Vakhtangov calls her "the older wife." Indeed, she is a generation older than the husband, Ivan's father. Following the Koryak custom Vakhtangov had told me, I suppose after the former husband of this "older wife" had died, she should have married her husband's brother's son. However, since there was probably nobody suitable in his family, to prevent the wife's family inheriting the reindeer, Ivan's father, who is the son of the late husband's sister, divorced his "younger wife" and remarried the "older wife." In fact in this case, the reindeer weren't inherited by the lineage of the late husband's father, but were passed on to the lineage of Ivan's father, through his sister. The married sister was probably the only one who could inherit them in the late husband's family. In other words, looking at it from the viewpoint of the late husband's father, the reindeer weren't inherited by the family of his son's wife, but were inherited by the family of the married sister. The reindeer herds of the two families were put together as one, which should be passed on to Ivan in the future. Since Ivan was adopted by Maria's father, Ivan should be adding to this herd the reindeer herd he will receive from Maria's father. As for Ivan's father or Maria's

father, although the herds are separate at the moment, they should have no reason to oppose the gathering of the herds – that must have been one herd originally, following the father's lineage – as one again. This means the relatives have become close again by this adoption.

Then Vakhtangov went on to talk about something strange. He said that Maria was once married to another husband. Now that I thought about it, Maria's husband, whom I had met at her hut, was named Ivan. In striking contrast to the way Maria seemed to be living her life out with strong conviction, her husband looked like a lean and feeble man, who seemed to be very concerned about the opinions of others. Maria and Ivan were *petohi-yelgikumigun*, or great-great-grandchildren of the same lineage. They were *petohi-haitumug* or "distant relatives" who could marry each other. However, in the eyes of society, Ivan was the adopted child of Maria's father, which made them brother and sister. Therefore, although in reality they lived together and people would say Ivan was Maria's husband, they may have not been recognized socially as husband and wife. That might have been what he showed in his distant attitude toward Maria in front of others. From what Vakhtangov had said, she had been married to another husband, but they hadn't had any children. In fact, that was the reason why Maria's father had adopted Ivan. After that, Maria's husband died. So following the custom, she would have had to marry the son of her husband's younger brother. This, however, she had refused to do. As a result, her husband's family took away all the property from her; that meant all the reindeer, boats, and all the supplies. That was why she was living in a small hut now. Vakhtangov said that she was probably living with what few reindeer her father had given her.

Accordingly, when the husband or wife of a childless couple dies, there is the

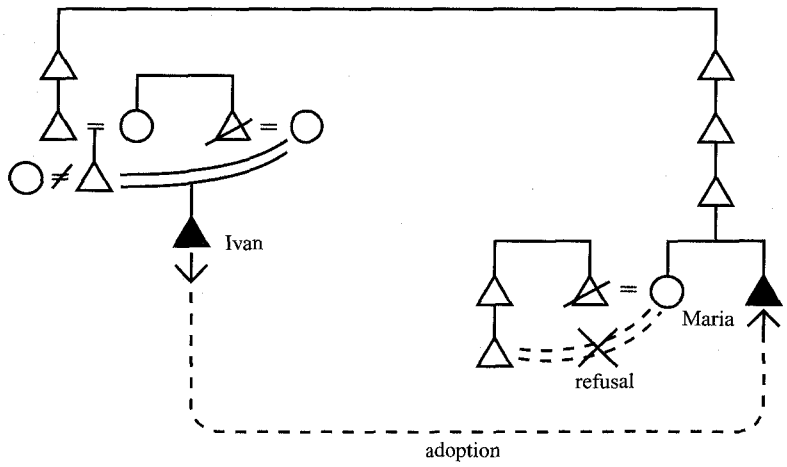


**fig.14** The adoption of Ivan by Maria's father and Maria's refusal of *koyoipin*, the renewal of marriage.

first habitual rule, that the one left behind inherits the property. Then there's the second habitual rule that the dead husband or wife's family "renews" the marriage in order to prevent the spouse's family from inheriting all the property. On top of that, when the widow or widower refuses to remarry, the dead husband or wife's family has the right to confiscate all the property, which is the third rule. I have no idea why Maria refused to remarry. Even though she had lost her husband, she might have been unwilling to marry a new husband a generation younger than her; even though she would be deprived of all her property, she might have thought that her day-to-day life was guaranteed because her father and Ivan had enough reindeer; she might have thought she would live along with her husband who lives in another world; or she could have made up her mind to live with Ivan, although they were socially brother and sister. The true reason must be kept locked up in Maria's heart. Nonetheless, I saw she had a strong mind in the way that she rejected the Koryak customs. Now that I think about her, I think I had already felt the strong power of her conduct when she was cutting apart the reindeer as she ate *mukhomor* and sang her song, and in her bright eyes and words that she spoke as she was telling me about the ritual cycle, answering my questions one after another. The most traditional person must be the one who can break that tradition at the same time that they develop it into the future. Tradition doesn't regulate human beings' activities, but their activities make tradition. I felt that Maria was a person capable of this.

## 7.5 The Koryak Society and Its Changes

As we have seen up to now, the names Koryaks use to refer to their relatives and their marriage system do not contradict their social system. In the Koryak social system, the family group doesn't consist of a unilineal descent of the patrilineage or matrilineage. Therefore, parallel cousin marriages or cross cousin marriages don't occur in order to maintain relationships between the groups. Their family groups are constituted from a cognatic (bilateral) descent that belongs neither to the patrilineage nor the matrilineage. However, as Vakhtangov had repeatedly told me, the fact that the reindeer are inherited through the male line indicates that the *nimiyolgan* – which is their residential group – tends to be formed around the father and the wives and children of his sons (especially the eldest son). As a matter of fact, as Vakhtangov had also mentioned, there were no particular residential rules that they have to follow after marriage, and the newly married couple can live with the husband's group or with the wife's group. Their reindeer inheritance is based on a restricted cognatic descent group, which consists of a pair of parents and their children's spouses and their children. However, at the same time, a number of these groups gather and form an extended version of a cognatic descent group, including their distant relatives, which leads to the organization of a *nimiyolgan* as a residential group. Moreover, a *kumigun* living in one *yanana* becomes the unit of production, consumption and

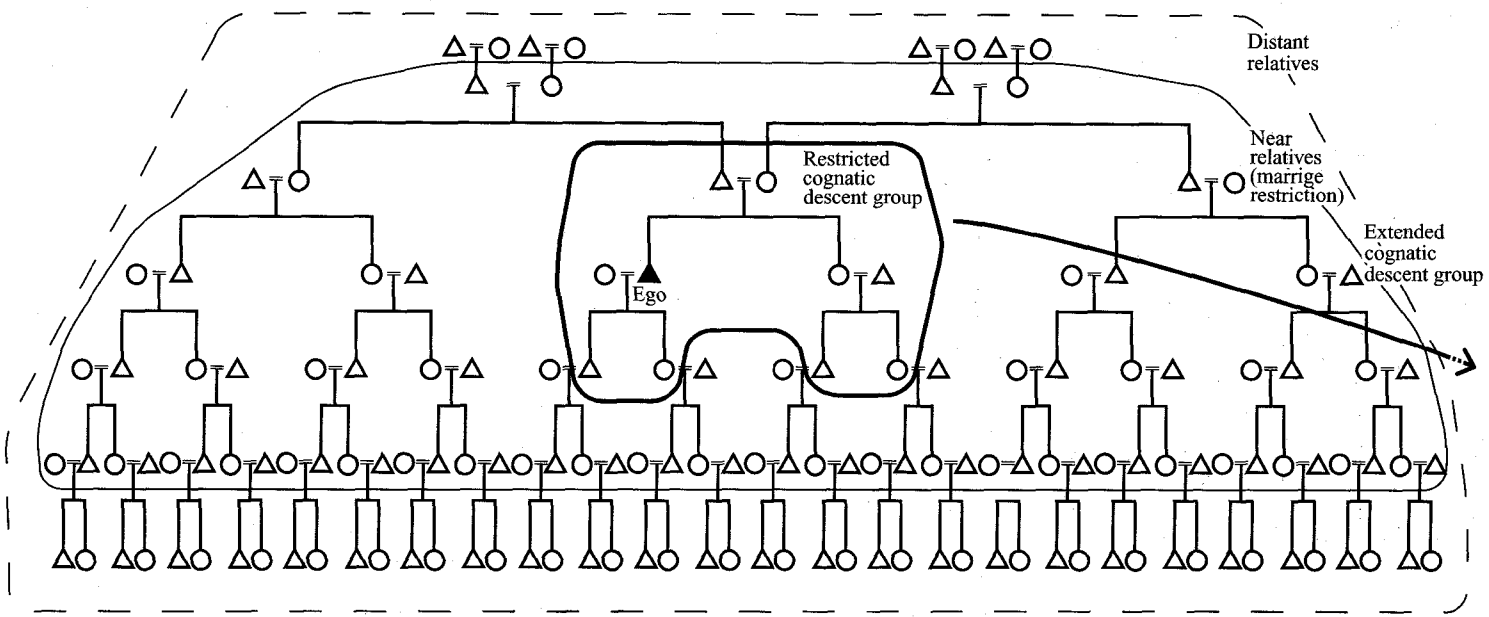


**fig.15** Chart showing the *nimiyolgan* (residential group) and its relationship to the core members, which are a restricted cognatic descent group. It can also include members of the extended cognatic descent group and non-relatives.

reindeer ownership in day-to-day life. The *kumigun* is basically constituted of parents and their unmarried children – i.e. a nuclear family – but sometimes there are situations where the daughter's future husband lives together with them, or the unmarried son is away living with his future wife's family.

The future husband comes to his future wife's place and lives with her parents. When he finishes his labor, they form a new *kumigun* and choose where they will live based on the kinship relations of cognatic descent. As a matter of fact, taking into consideration the reindeer inheritance through the male line, as Vakhtangov had demonstrated, giving the example of a wedding, it is true they tend to live with the husband's side. That the future husband lives temporarily at his wife's dwelling before getting married can be interpreted as compensation. Each *nimiyolgan* tries to increase its power by increasing the number of people and reindeer living there, from which derives the competitive relationships between the *nimiyolgan.* Children are born to new-married couples and eventually the parents die. When the children get married, a restricted cognatic descent group – which consists of a number of *kumigun* with their parents standing at the top – is formed again. Then the reindeer are passed down along the lineal family; mainly from the father to son. The "renewal" of marriage and adoption is part of the social system to secure the inheritance of reindeer.

It is interesting to note here that the traditional knowledge of rituals is mainly transmitted by women, as is described later. So, there are some tendencies of inheritance of reindeer through the male line, and of inheritance of knowledge of rituals through the female line, although there is no such descent group based on lineality, such as lineage or clan.

Now, looking at their society from the viewpoint of a subsistence unit of life, the *kumigun* is the minimum unit for the possession of reindeer and daily life, so I will call this a "domestic unit." When a couple and their children are related to each other bilaterally, the "restricted cognatic descent group" – which is a unit of marriage and reindeer inheritance – becomes a larger unit of subsistence. I will call this for now the "herding unit." This forms the core of the *nimiyolgan* wherein they manage the reindeer cooperatively and live in one location. In fact, the *nimiyolgan* itself is not only composed of a restricted cognatic descent group, but also includes distant relatives. This is constituted from an extended cognatic descent group; it can sometimes be a residential group including *kumiguns* that are not related. Accordingly, the "herding unit" is an ideal social structure; this is being practiced in the field of the living in a visible way as the *nimiyolgan,* a residential group.

Among the Canadian Forest Indians – who are reindeer hunters – the basic social structure is formed by the "domestic unit" and the "hunting unit," which is a restricted cognatic descent group, while their campsite – the actual residential group – is built according to the ecological or social situation. The social structure of the

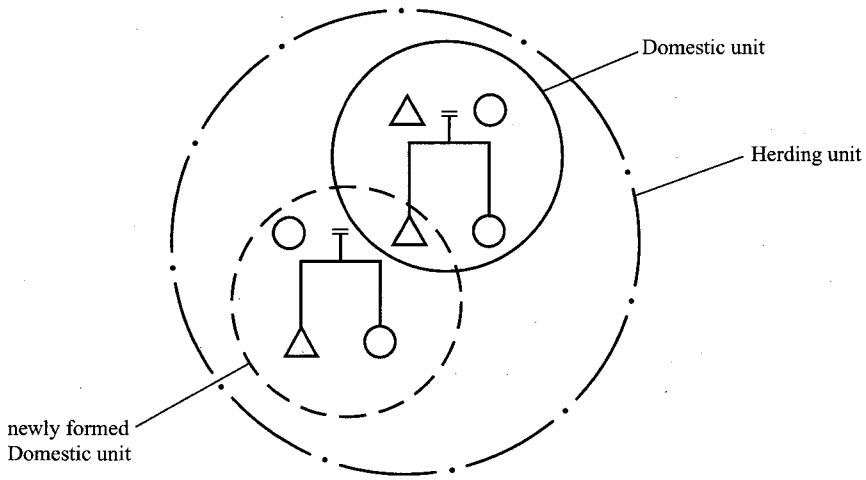


**fig.16** Chart showing the distinction between the domestic unit and the herding unit.

reindeer-herding Koryaks is basically the same as what was seen among the hunters. However, the *nimiyolgan* as a residential group is more stable compared to that of the hunters. The society of the reindeer hunters are characterized by their flexibility – they constantly change their groupings according to the size of the reindeer herd and the reindeer's seasonal migration – whereas the society of the nomadic reindeer herders' characteristic is that they form a stable group to continuously control a fixed-sized reindeer herd. That is to say, the change from hunting to herding lifestyle – although its unit of livelihood is a group based on the same principle of cognatic descent from the "hunting unit" to the "herding unit" – the camp, which was the hunters' temporary residential group, came to be a *nimiyolgan* with certain continuity. Furthermore the hunting unit, which is the restricted cognatic descent group that is seen among reindeer hunters, was formed based on the connection between the parents and children as well as on the strong bond between brothers and sisters; whereas in the restricted cognatic descent group among the reindeer-herding Koryaks, the father-and-son link based on the inheritance of reindeer has been intensified. Although a descent group clearly of paternal lineage cannot be seen formed, people are very concerned about genealogical relationships. Consequently, the strong brother-and-sister bond seen among Canadian Indians is relatively weakened among the Koryaks. On the other hand, this has enabled the brothers who don't inherit the main part of the reindeer herd to choose freely where they will live, and has made it easier for the extended version of a cognatic descent group to compose the *nimiyolgan*.

As the *kolkhoz* was established, then the *sovkhoz*, and people who lived in different *nimiyolgans* started to live permanently in one village, most of the reindeer

herds were owned by the *sovkhoz*. The four reindeer herds were then controlled by a herder who was a wage earner. Meanwhile, one other herd was a mixture of individually owned reindeer. Therefore, in a way, you can say that the whole village is by now one large *nimiyolgan*. However in reality, it is natural to think that the role of the *nimiyolgan* as a community has faded. Referring to this, Vakhtangov said that people don't know all of their relatives throughout the various generations, and that the relatives have dispersed. He went on and said,

"In the old days, everybody knew the elderly people. It was easy to get to know your relatives. But nowadays, the old people just sit in their houses and don't work outside. So it is hard for people to recognize who their relatives are."

Nonetheless, they have maintained their kinship. Each domestic unit has their own dwellings and are making an independent livelihood as a household – which consists of a nuclear family that owns its own reindeer. On top of that, reindeer are being passed on as has always been done, and although they are scattered throughout the village, their core is the herding unit, which is a restricted cognatic descent group. The ceremonies that they hold according to the annual cycle are done per "domestic unit," and the inheritance of that "tradition" is done through their family relatives, who are of cognatic descent. Certainly, as Vakhtangov had said, it is true that it has become difficult to get to know your relatives within and around the village where the family members are dispersed throughout the village. Nevertheless, they do recognize the boundary between a "close relative" and a "distant relative," which is connected to the marital restrictions. Namely, their family relationships have been maintained to this day through reindeer inheritance, marital restrictions and passing on the rituals and ceremonies.

To begin with, the *nimiyolgan* was a residential group formed with the purpose of managing reindeer cooperatively. It was the equivalent to the Northern Canadian reindeer hunters' camps, of which they could change the composition freely according to the ecological and social situations. Their ideal social structure is a relationship of people linked together by cognatic descent, and these people form various groups according to their situation. By using the principle of cognatic descent, subsistence activities from hunting to herding could be managed to shift without changing social structure. In the same way, they had responded to the current changes in society again and had shifted from living in a *nimiyolgan* to living permanently in a village without changing the ideological social structure itself.